124 874263c

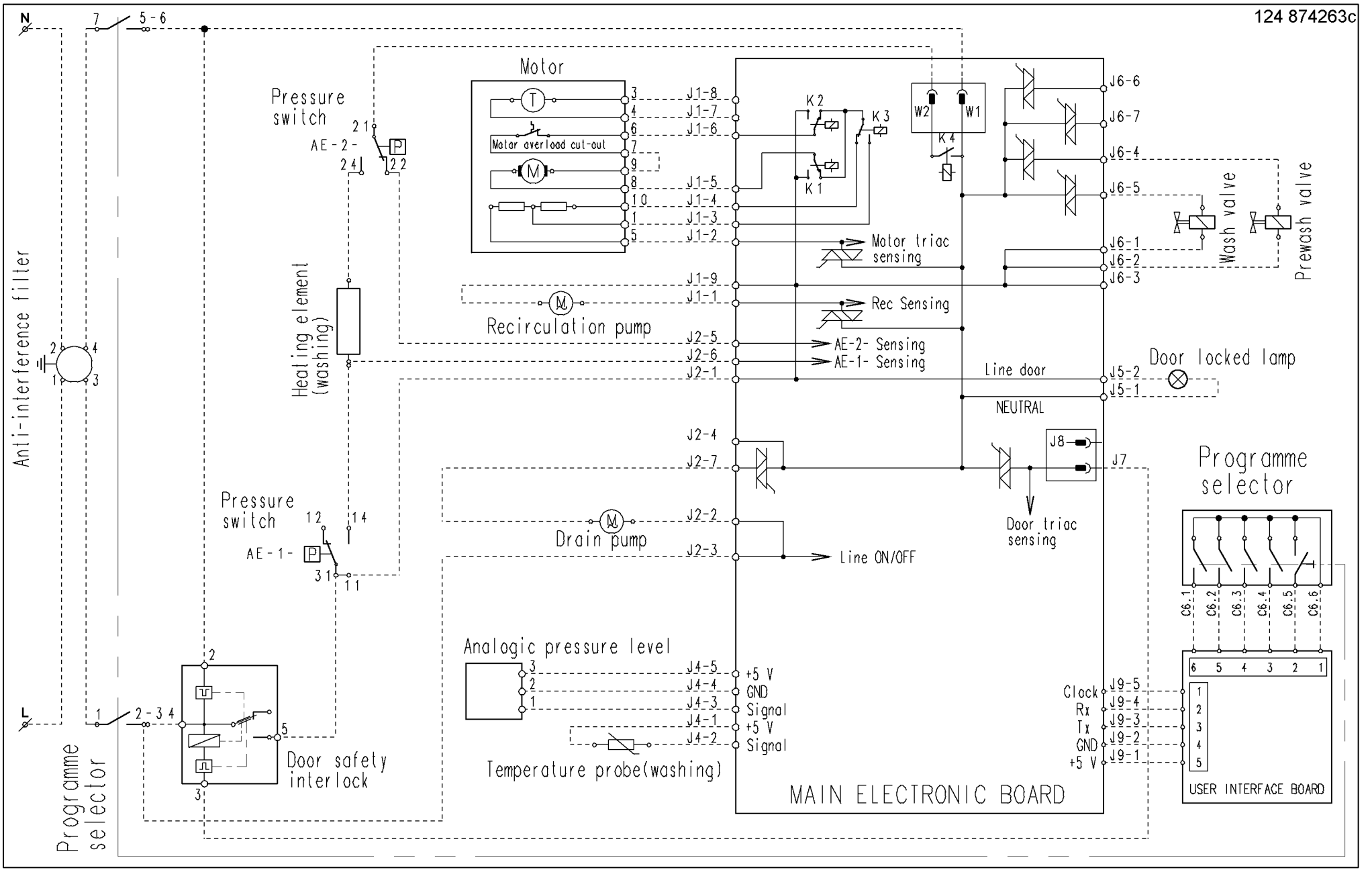
N
L
Anti-interference filter
Programme selector
Pressure switch
AE-2-
Pressure switch
AE-1-
Heating element (washing)
Motor
Motor overload cut-out
Recirculation pump
Drain pump
Analogic pressure level
Temperature probe(washing)
Door safety interlock
Motor triac sensing
Rec Sensing
AE-2- Sensing
AE-1- Sensing
Line door
NEUTRAL
Line ON/OFF
Door triac sensing
Door locked lamp
Wash valve
Prewash valve
Programme selector
MAIN ELECTRONIC BOARD
USER INTERFACE BOARD
+5 V
GND
Signal
Clock
Rx
Tx