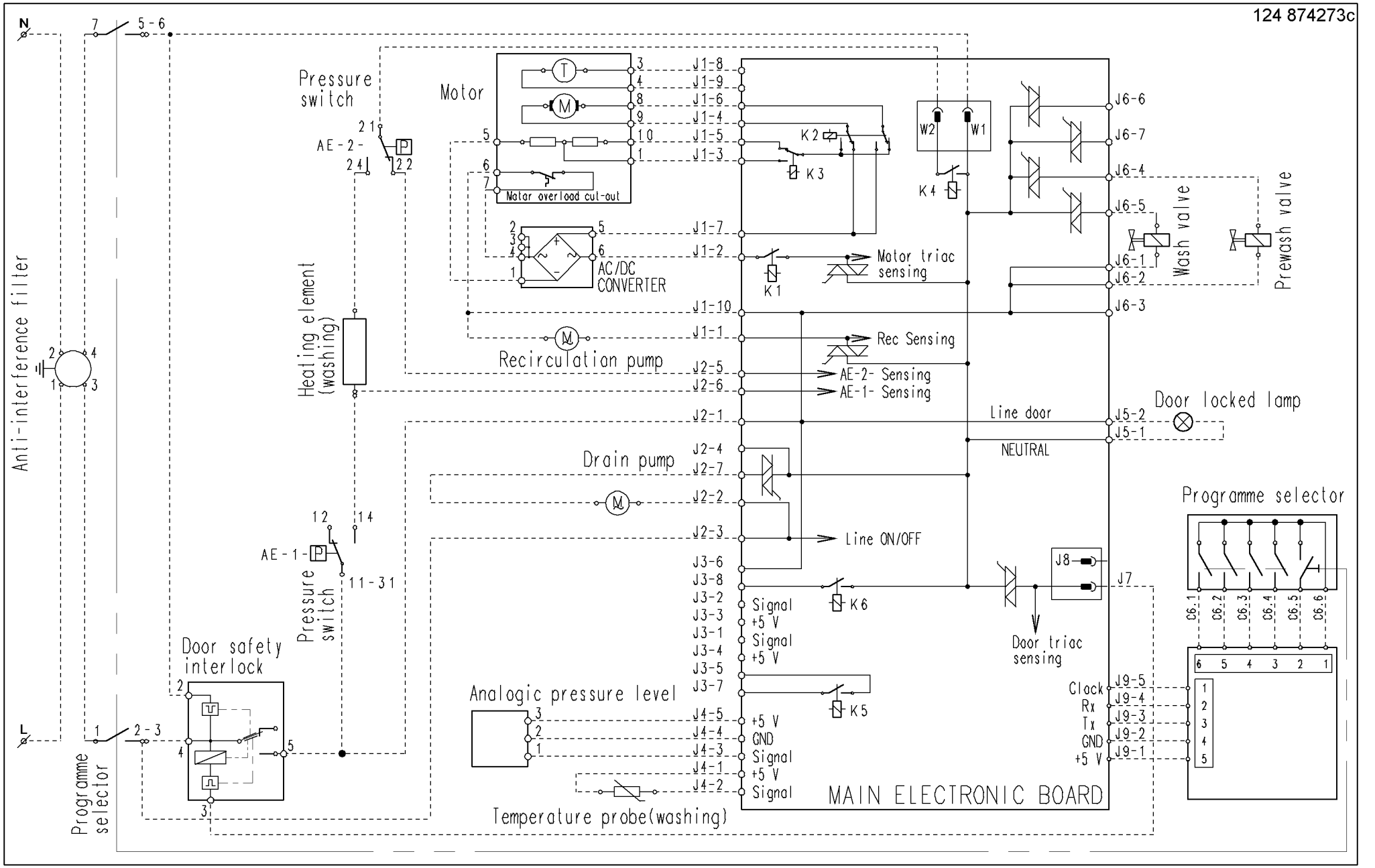
124 874273c
N
L
Anti-interference filter
Pressure switch
AE-2-
Motor
Motor overload cut-out
AC/DC CONVERTER
Heating element (washing)
Recirculation pump
Motor triac sensing
Rec Sensing
AE-2- Sensing
AE-1- Sensing
Line door
NEUTRAL
Door locked lamp
Drain pump
Line ON/OFF
AE-1-
Pressure switch
Door safety interlock
Programme selector
Analogic pressure level
Temperature probe(washing)
Signal
+5 V
GND
Door triac sensing
Wash valve
Prewash valve
Programme selector
Clock
Rx
Tx
GND
+5 V
MAIN ELECTRONIC BOARD