124 874454c

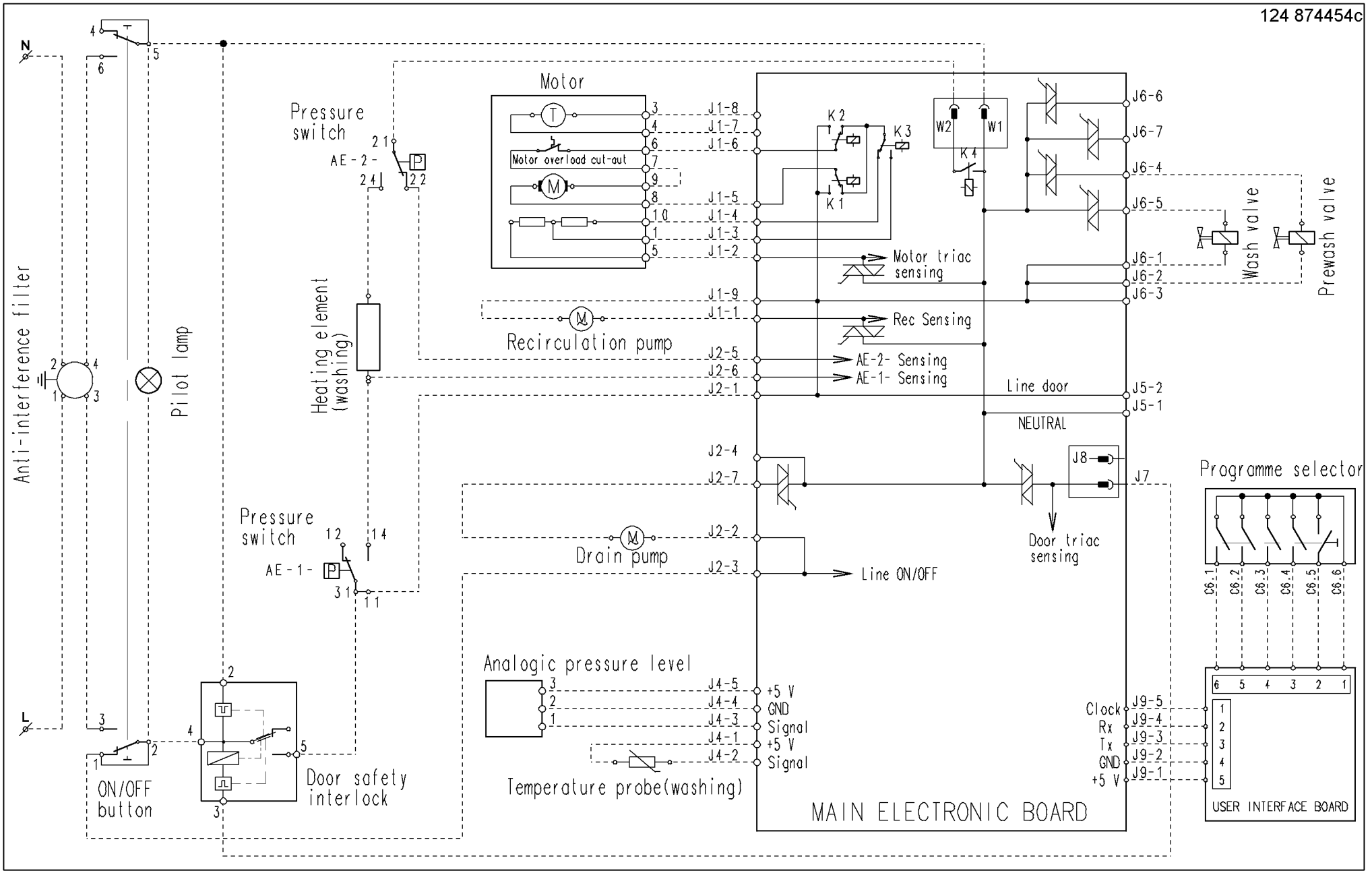
N
L
Anti-interference filter
Pilot lamp
ON/OFF button
Door safety interlock
Pressure switch
AE-2-
Heating element (washing)
Pressure switch
AE-1-
Motor
Motor overload cut-out
Recirculation pump
Drain pump
Analogic pressure level
Temperature probe(washing)
J1-8
J1-7
J1-6
J1-5
J1-4
J1-3
J1-2
J1-9
J1-1
J2-5
J2-6
J2-1
J2-4
J2-7
J2-2
J2-3
J4-5
J4-4
J4-3
J4-1
J4-2
+5 V
GND
Signal
+5 V
Signal
K1
K2
K3
K4
W1
W2
Motor triac sensing
Rec Sensing
AE-2- Sensing
AE-1- Sensing
Line door
NEUTRAL
Line ON/OFF
Door triac sensing
J6-6
J6-7
J6-4
J6-5
J6-1
J6-2
J6-3
J5-2
J5-1
J8
J7
Wash valve
Prewash valve
Programme selector
Clock
Rx
Tx
GND
+5 V
J9-5
J9-4
J9-3
J9-2
J9-1
USER INTERFACE BOARD
MAIN ELECTRONIC BOARD