124 879112c

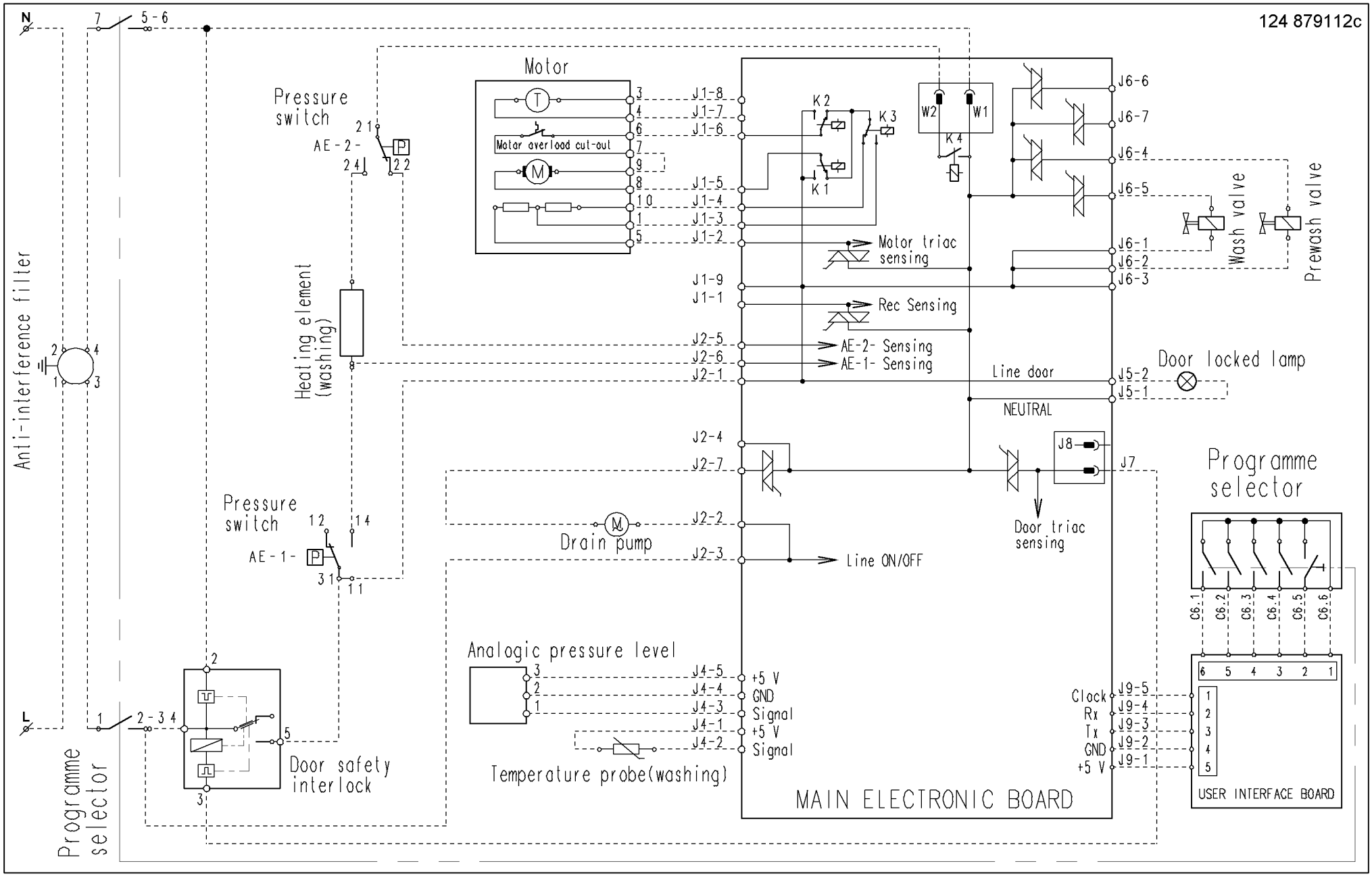
N
L
Anti-interference filter
Programme selector
Pressure switch
AE-2-
Pressure switch
AE-1-
Heating element (washing)
Motor
Motor overload cut-out
Motor triac sensing
Rec Sensing
AE-2- Sensing
AE-1- Sensing
Line door
NEUTRAL
Door locked lamp
Wash valve
Prewash valve
Programme selector
Drain pump
Line ON/OFF
Door triac sensing
Analogic pressure level
Temperature probe(washing)
Door safety interlock
MAIN ELECTRONIC BOARD
USER INTERFACE BOARD
Clock
Rx
Tx
GND
+5 V
Signal