124 879841c

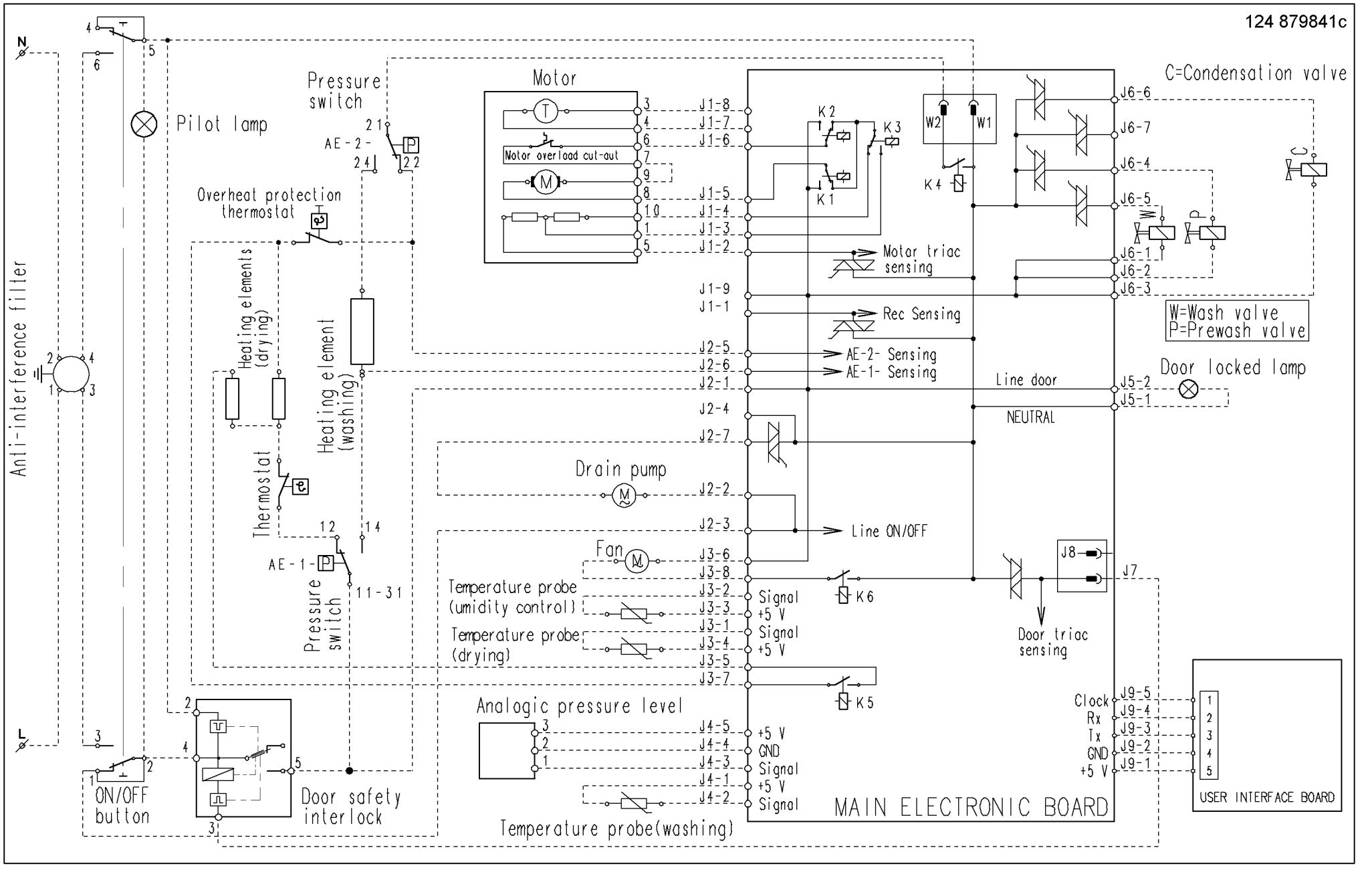
N
L
Anti-interference filter
Pilot lamp
Pressure switch
AE-2-
Overheat protection thermostat
Heating elements (drying)
Heating element (washing)
Thermostat
AE-1-
Pressure switch
ON/OFF button
Door safety interlock
Motor
Motor overload cut-out
Motor triac sensing
Rec Sensing
AE-2- Sensing
AE-1- Sensing
Line door
NEUTRAL
Line ON/OFF
Drain pump
Fan
Temperature probe (umidity control)
Temperature probe (drying)
Analogic pressure level
Temperature probe(washing)
Signal
+5 V
GND
Door triac sensing
C=Condensation valve
W=Wash valve
P=Prewash valve
Door locked lamp
Clock
Rx
Tx
MAIN ELECTRONIC BOARD
USER INTERFACE BOARD