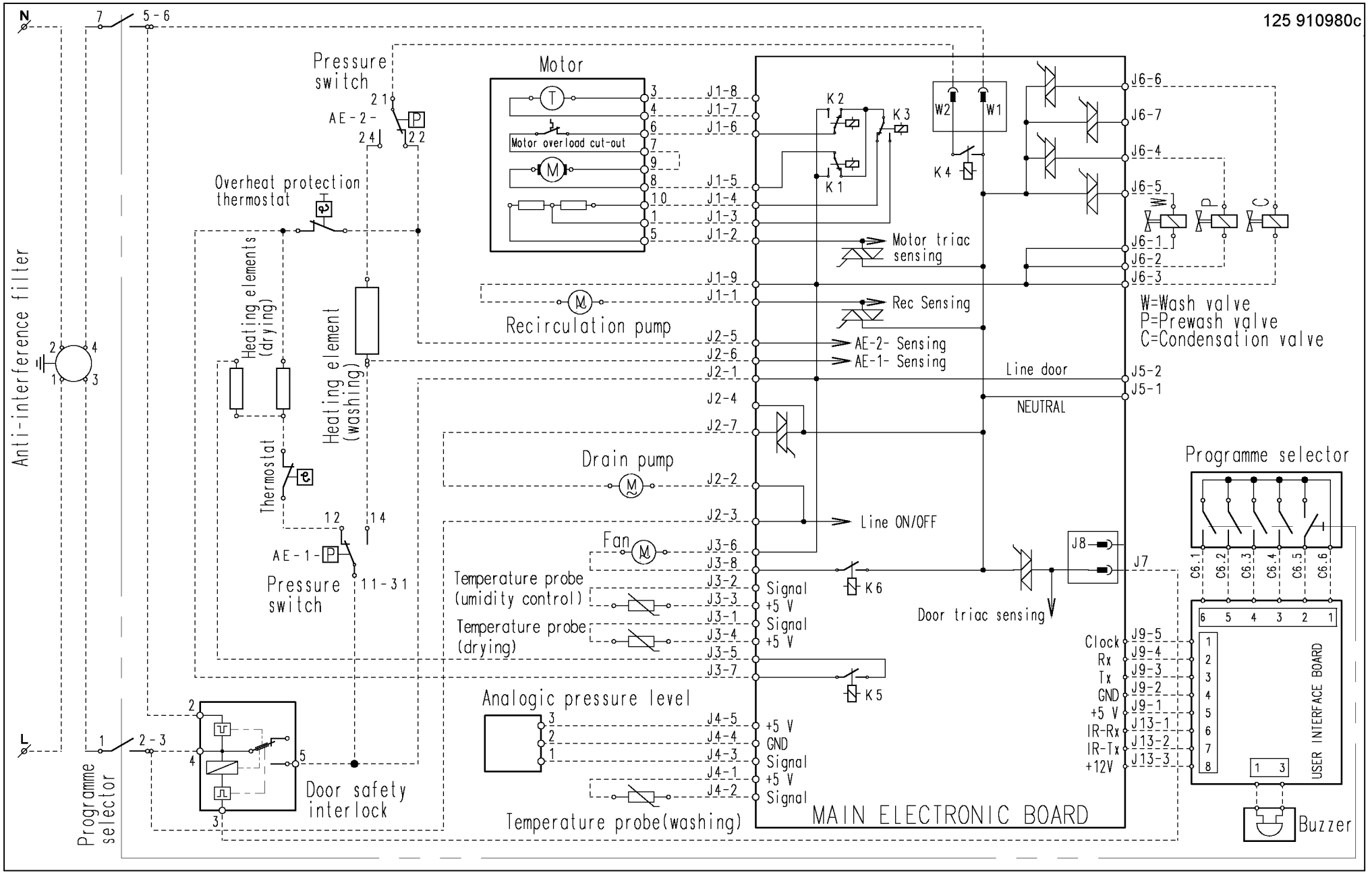
125 910980c
N
L
Anti-interference filter
Programme selector
Pressure switch
AE-2-
Motor
Motor overload cut-out
Overheat protection thermostat
Heating elements (drying)
Heating element (washing)
Thermostat
AE-1-
Pressure switch
Recirculation pump
Drain pump
Fan
Temperature probe (umidity control)
Temperature probe (drying)
Analogic pressure level
Temperature probe(washing)
Door safety interlock
Motor triac sensing
Rec Sensing
AE-2- Sensing
AE-1- Sensing
Line ON/OFF
Line door
NEUTRAL
Door triac sensing
W=Wash valve
P=Prewash valve
C=Condensation valve
Programme selector
Clock
Rx
Tx
GND
+5 V
IR-Rx
IR-Tx
+12V
USER INTERFACE BOARD
Buzzer
MAIN ELECTRONIC BOARD