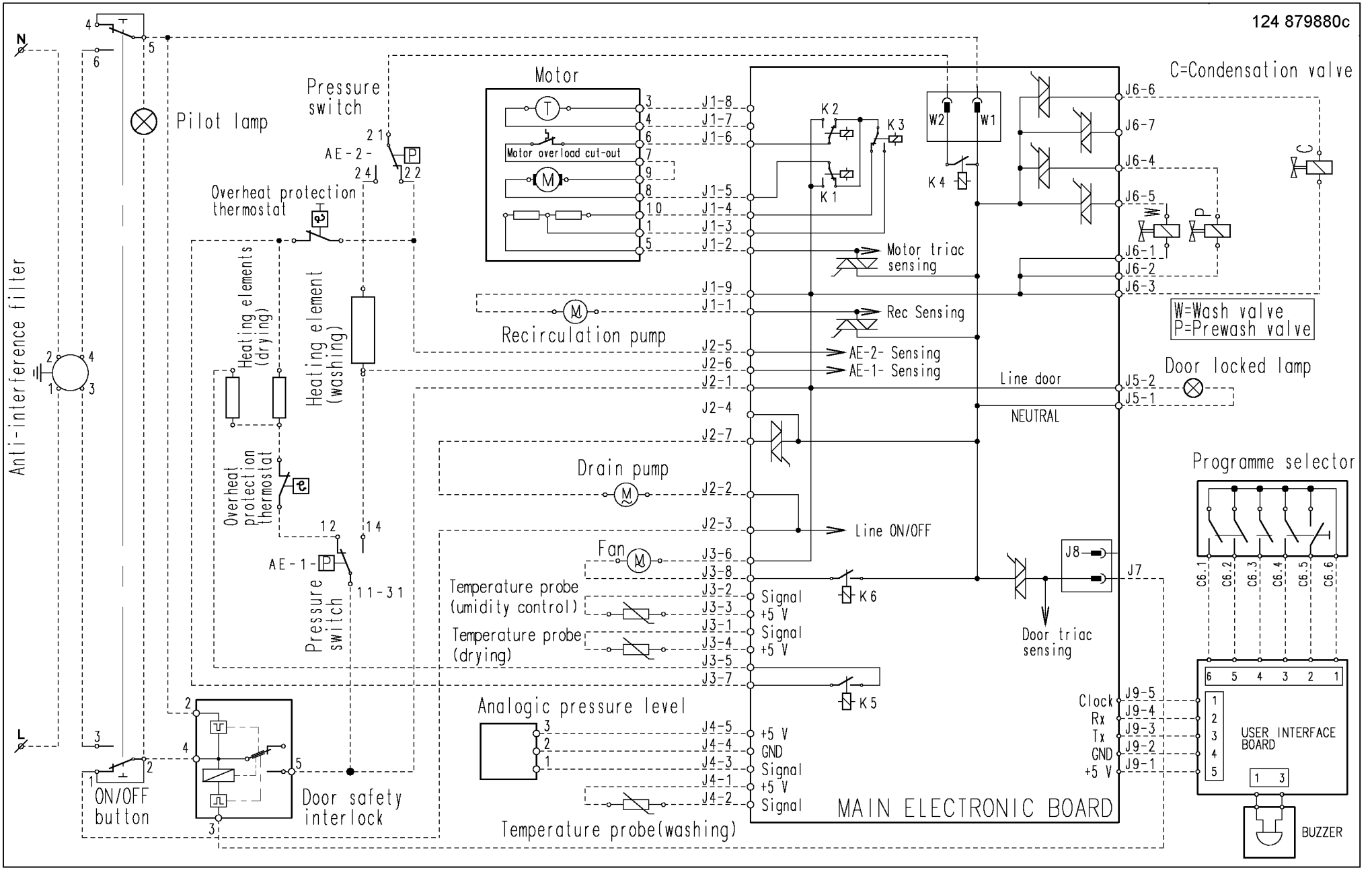
124 879880c
N
L
Anti-interference filter
Pilot lamp
Pressure switch
AE-2-
Overheat protection thermostat
Heating elements (drying)
Heating element (washing)
Overheat protection thermostat
AE-1-
Pressure switch
ON/OFF button
Door safety interlock
Motor
Motor overload cut-out
Recirculation pump
Drain pump
Fan
Temperature probe (umidity control)
Temperature probe (drying)
Analogic pressure level
Temperature probe(washing)
Motor triac sensing
Rec Sensing
AE-2- Sensing
AE-1- Sensing
Line ON/OFF
Signal
+5 V
GND
K1
K2
K3
K4
K5
K6
W1
W2
C=Condensation valve
W=Wash valve
P=Prewash valve
Line door
NEUTRAL
Door locked lamp
Door triac sensing
Programme selector
C6.1
C6.2
C6.3
C6.4
C6.5
C6.6
Clock
Rx
Tx
GND
+5 V
USER INTERFACE BOARD
BUZZER
MAIN ELECTRONIC BOARD