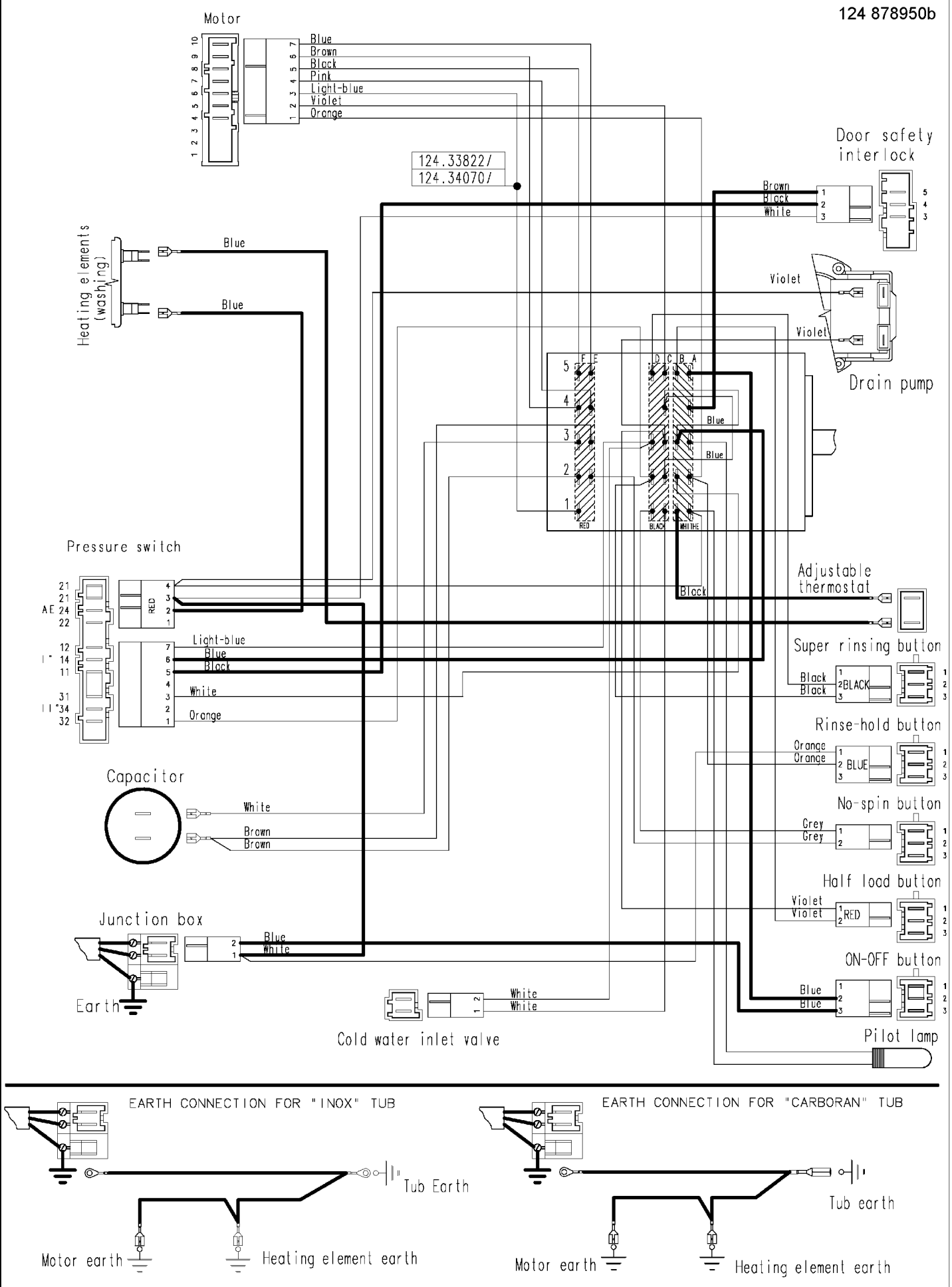
Motor
Blue
Brown
Black
Pink
Light-blue
Violet
Orange
124.33822/
124.34070/
Door safety interlock
Brown
Black
White
Heating elements (washing)
Blue
Blue
Violet
Violet
Drain pump
Blue
Blue
Pressure switch
Adjustable thermostat
Black
Light-blue
Blue
Black
White
Orange
Super rinsing button
Black
Black
Rinse-hold button
Orange
Orange
Capacitor
White
Brown
Brown
No-spin button
Grey
Grey
Half load button
Violet
Violet
Junction box
Blue
White
Earth
ON-OFF button
Blue
Blue
White
White
Cold water inlet valve
Pilot lamp
EARTH CONNECTION FOR "INOX" TUB
Tub Earth
Motor earth
Heating element earth
EARTH CONNECTION FOR "CARBORAN" TUB
Tub earth
Motor earth
Heating element earth