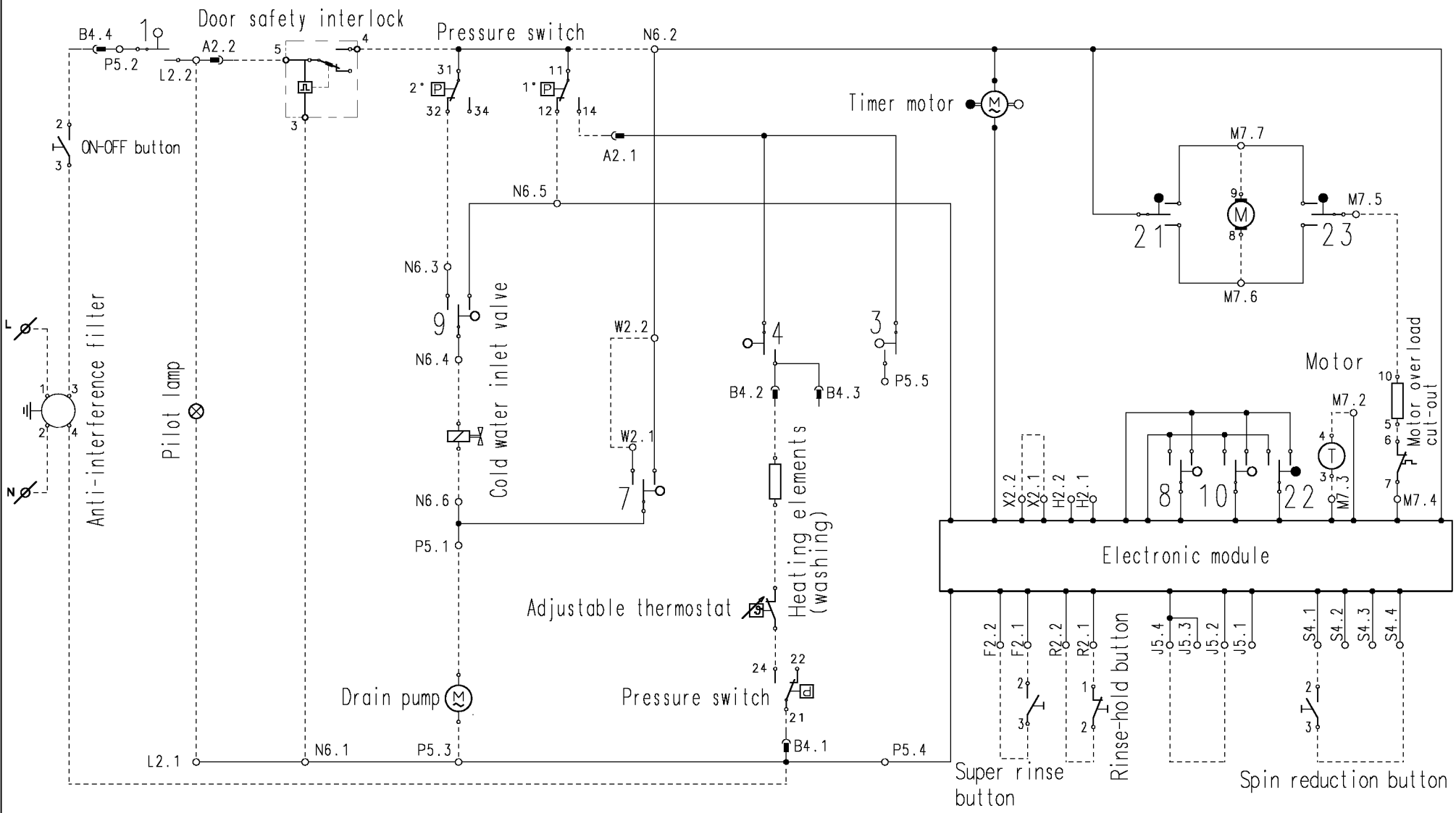
Door safety interlock
Pressure switch
Timer motor
ON-OFF button
Anti-interference filter
Pilot lamp
Cold water inlet valve
Heating elements (washing)
Adjustable thermostat
Drain pump
Pressure switch
Motor
Motor overload cut-out
Electronic module
Super rinse button
Rinse-hold button
Spin reduction button
B4.4
P5.2
L2.2
A2.2
N6.2
A2.1
N6.5
N6.3
N6.4
N6.6
P5.1
W2.2
W2.1
B4.2
B4.3
P5.5
B4.1
P5.4
L2.1
N6.1
P5.3
M7.7
M7.6
M7.5
M7.4
M7.2
M7.3
X2.2
X2.1
H2.2
H2.1
F2.2
F2.1
R2.2
R2.1
J5.4
J5.3
J5.2
J5.1
S4.1
S4.2
S4.3
S4.4