124 875710c

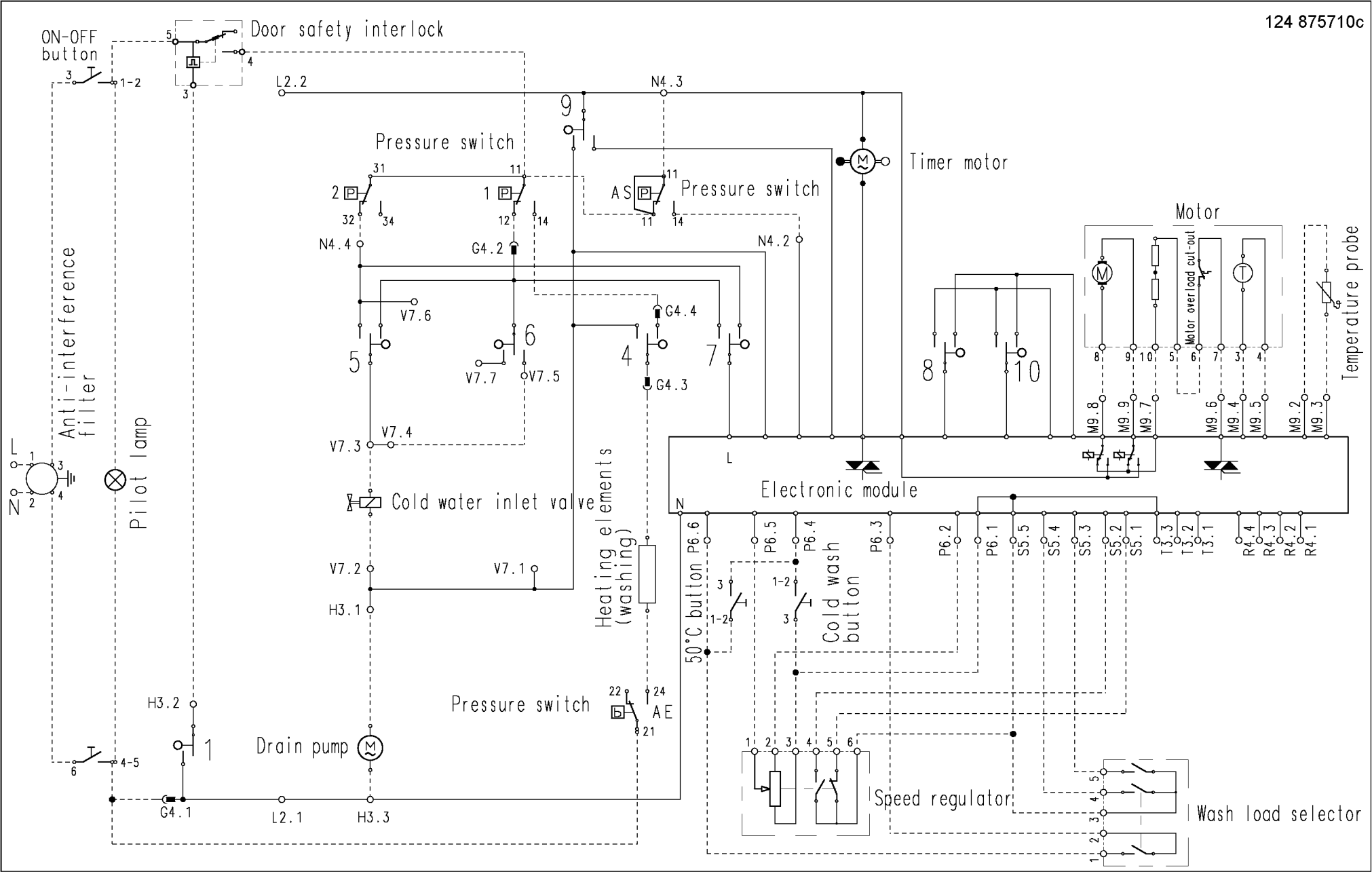
ON-OFF button
Door safety interlock
L2.2
N4.3
Pressure switch
Timer motor
Pressure switch
AS
Motor
Motor overload cut-out
Temperature probe
N4.4
G4.2
N4.2
V7.6
G4.4
V7.7
V7.5
G4.3
V7.4
V7.3
Anti-interference filter
Pilot lamp
Electronic module
Cold water inlet valve
Heating elements (washing)
V7.2
V7.1
H3.1
50°C button
Cold wash button
Pressure switch
AE
H3.2
Drain pump
G4.1
L2.1
H3.3
Speed regulator
Wash load selector