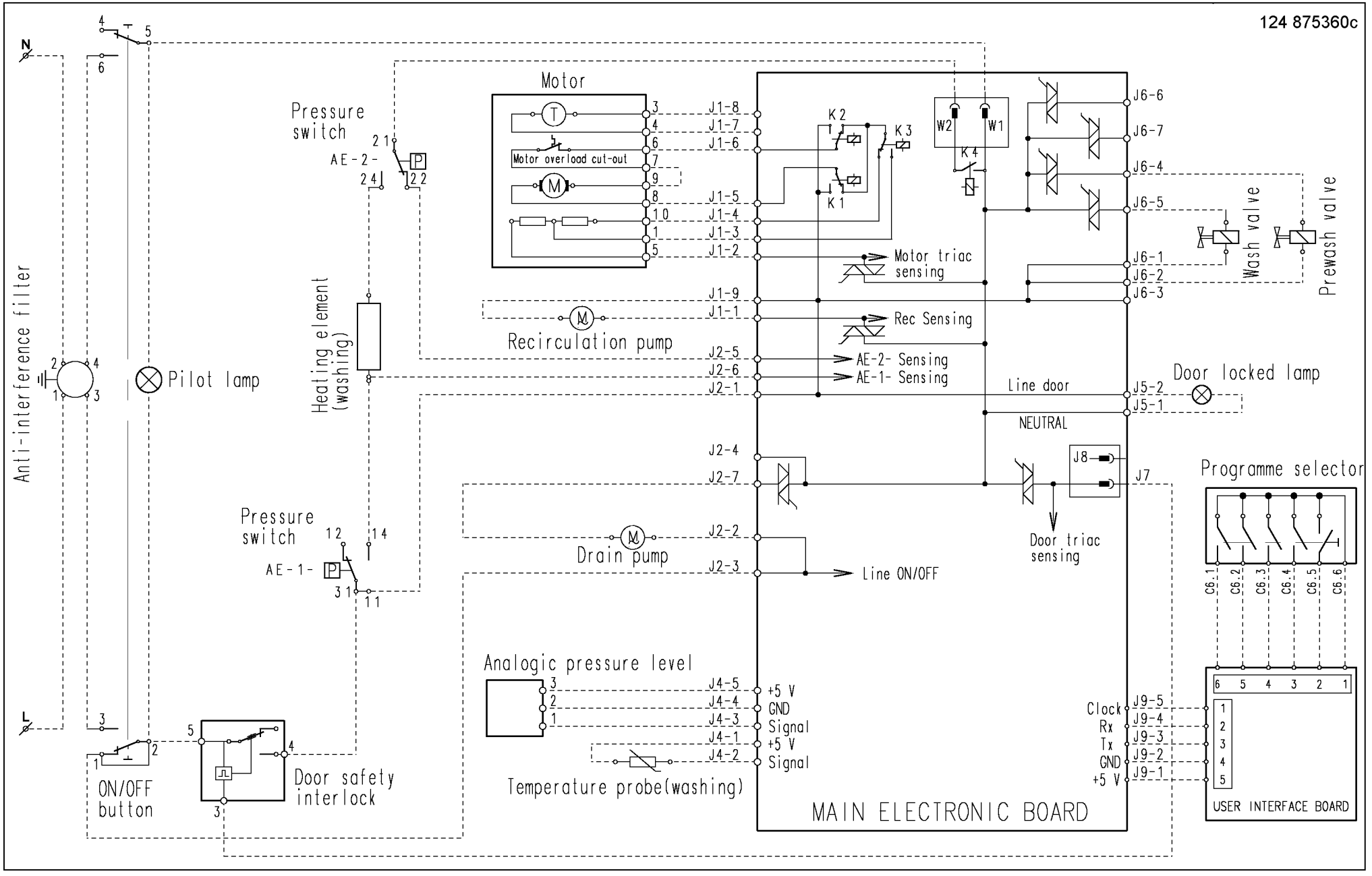
124 875360c
N
L
Anti-interference filter
Pilot lamp
ON/OFF button
Door safety interlock
Pressure switch
AE-2-
Heating element (washing)
Pressure switch
AE-1-
Motor
Motor overload cut-out
Recirculation pump
Drain pump
Analogic pressure level
Temperature probe(washing)
K1
K2
K3
K4
W1
W2
Motor triac sensing
Rec Sensing
AE-2- Sensing
AE-1- Sensing
Line door
NEUTRAL
Door triac sensing
Line ON/OFF
+5 V
GND
Signal
+5 V
Signal
Wash valve
Prewash valve
Door locked lamp
Programme selector
Clock
Rx
Tx
GND
+5 V
USER INTERFACE BOARD
MAIN ELECTRONIC BOARD