124 875450c

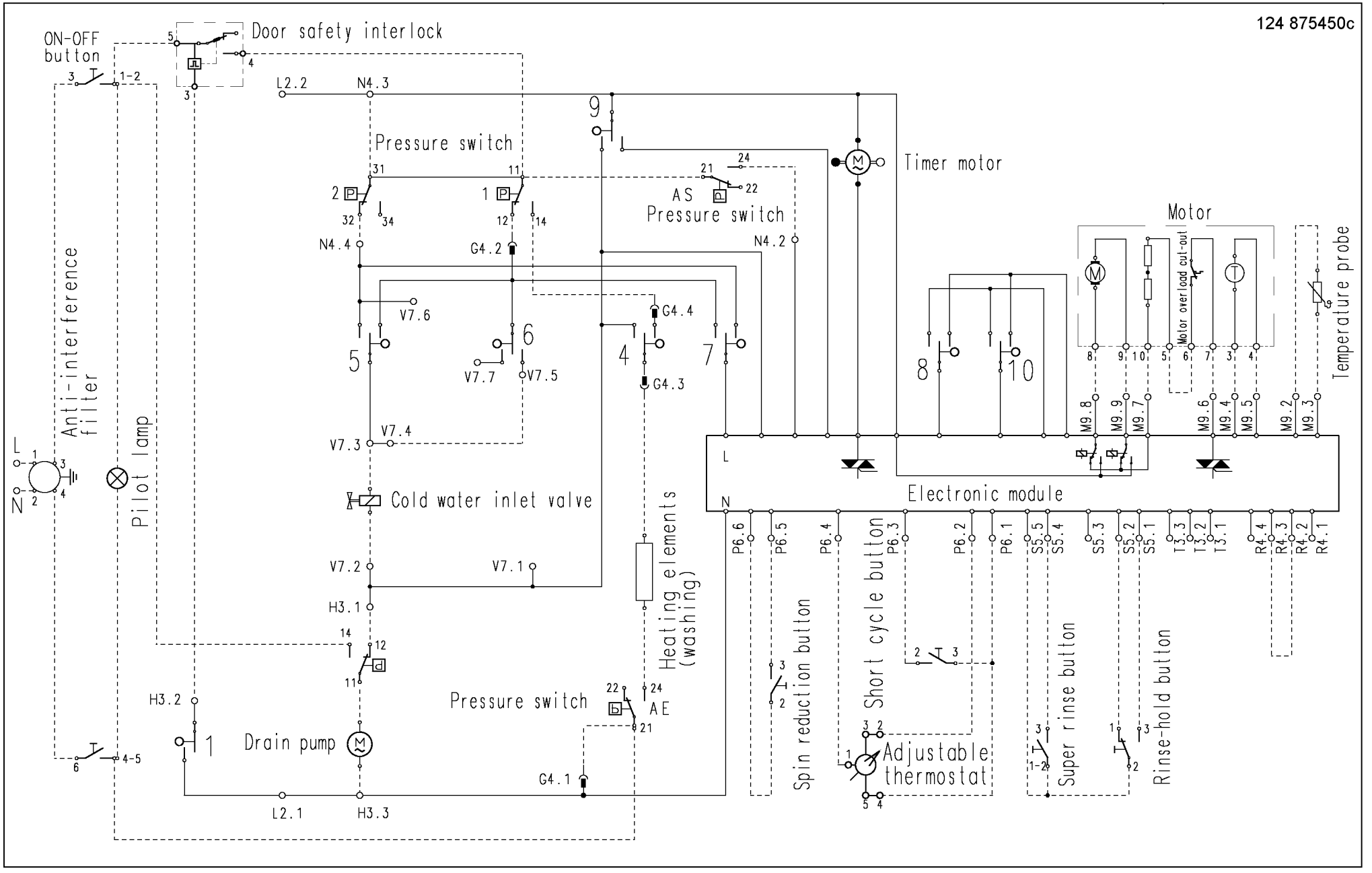
ON-OFF button
Door safety interlock
Pressure switch
Timer motor
AS Pressure switch
Motor
Motor overload cut-out
Temperature probe
Anti-interference filter
Pilot lamp
Cold water inlet valve
Heating elements (washing)
Electronic module
Pressure switch
AE
Drain pump
Spin reduction button
Short cycle button
Adjustable thermostat
Super rinse button
Rinse-hold button
L2.2
N4.3
N4.4
G4.2
G4.4
G4.3
G4.1
V7.6
V7.7
V7.5
V7.4
V7.3
V7.2
V7.1
H3.1
H3.2
H3.3
L2.1
N4.2
M9.8
M9.9
M9.7
M9.6
M9.4
M9.5
M9.2
M9.3
P6.6
P6.5
P6.4
P6.3
P6.2
P6.1
S5.5
S5.4
S5.3
S5.2
S5.1
T3.3
T3.2
T3.1
R4.4
R4.3
R4.2
R4.1