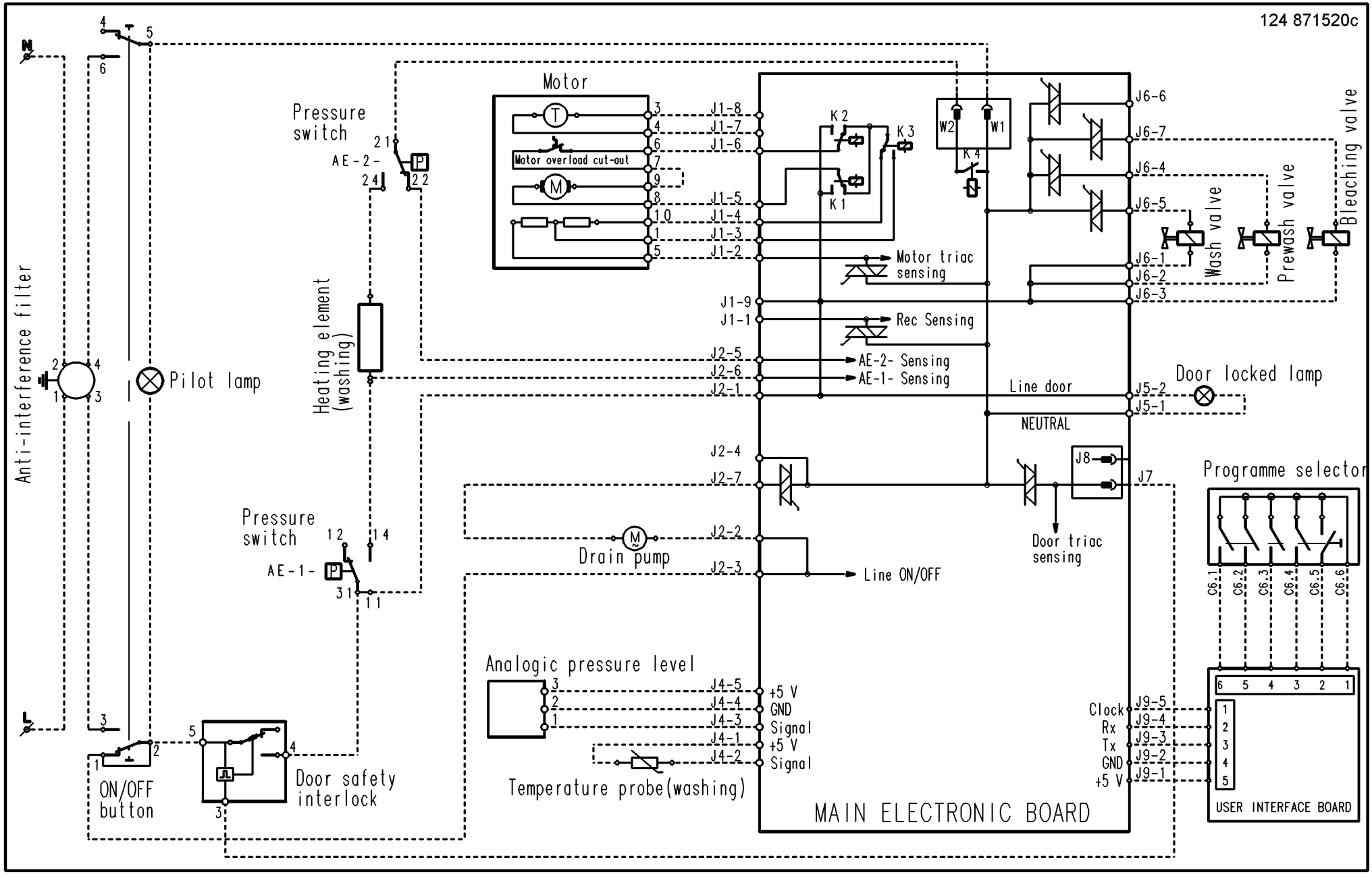
124 871520c
N
L
Anti-interference filter
Pilot lamp
Pressure switch
AE-2-
Heating element (washing)
Pressure switch
AE-1-
ON/OFF button
Door safety interlock
Motor
Motor overload cut-out
Motor triac sensing
Rec Sensing
AE-2- Sensing
AE-1- Sensing
Line door
NEUTRAL
Drain pump
Line ON/OFF
Door triac sensing
Analogic pressure level
Temperature probe(washing)
+5 V
GND
Signal
+5 V
Signal
Clock
Rx
Tx
GND
+5 V
MAIN ELECTRONIC BOARD
Wash valve
Prewash valve
Bleaching valve
Door locked lamp
Programme selector
USER INTERFACE BOARD