124 873331c

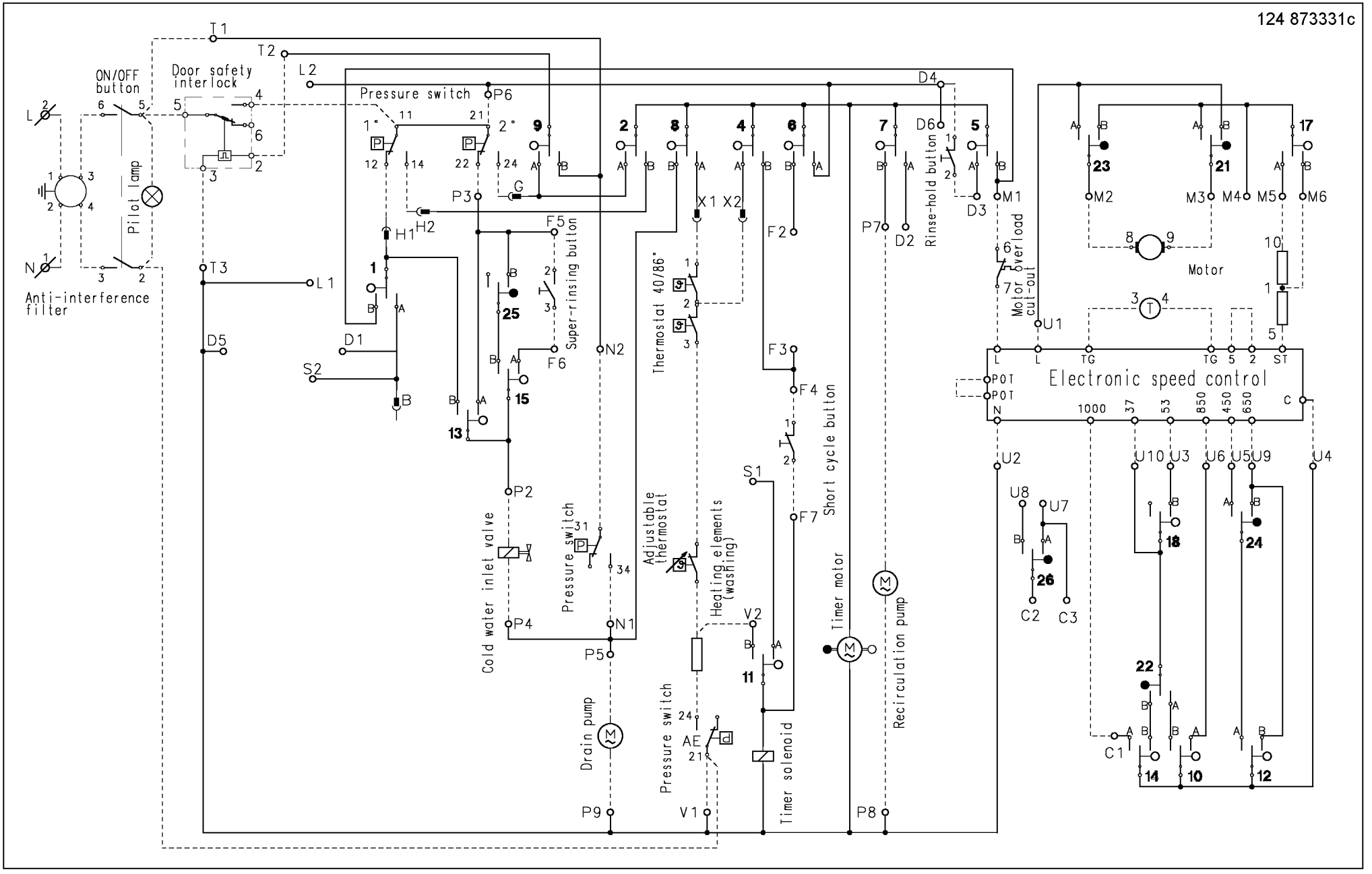
ON/OFF button
Door safety interlock
Pressure switch
Pilot lamp
Anti-interference filter
Super-rinsing button
Thermostat 40/86°
Rinse-hold button
Motor overload cut-out
Motor
Electronic speed control
Short cycle button
Timer motor
Recirculation pump
Cold water inlet valve
Pressure switch
Adjustable thermostat
Heating elements (washing)
Drain pump
Pressure switch
Timer solenoid