124 873390c

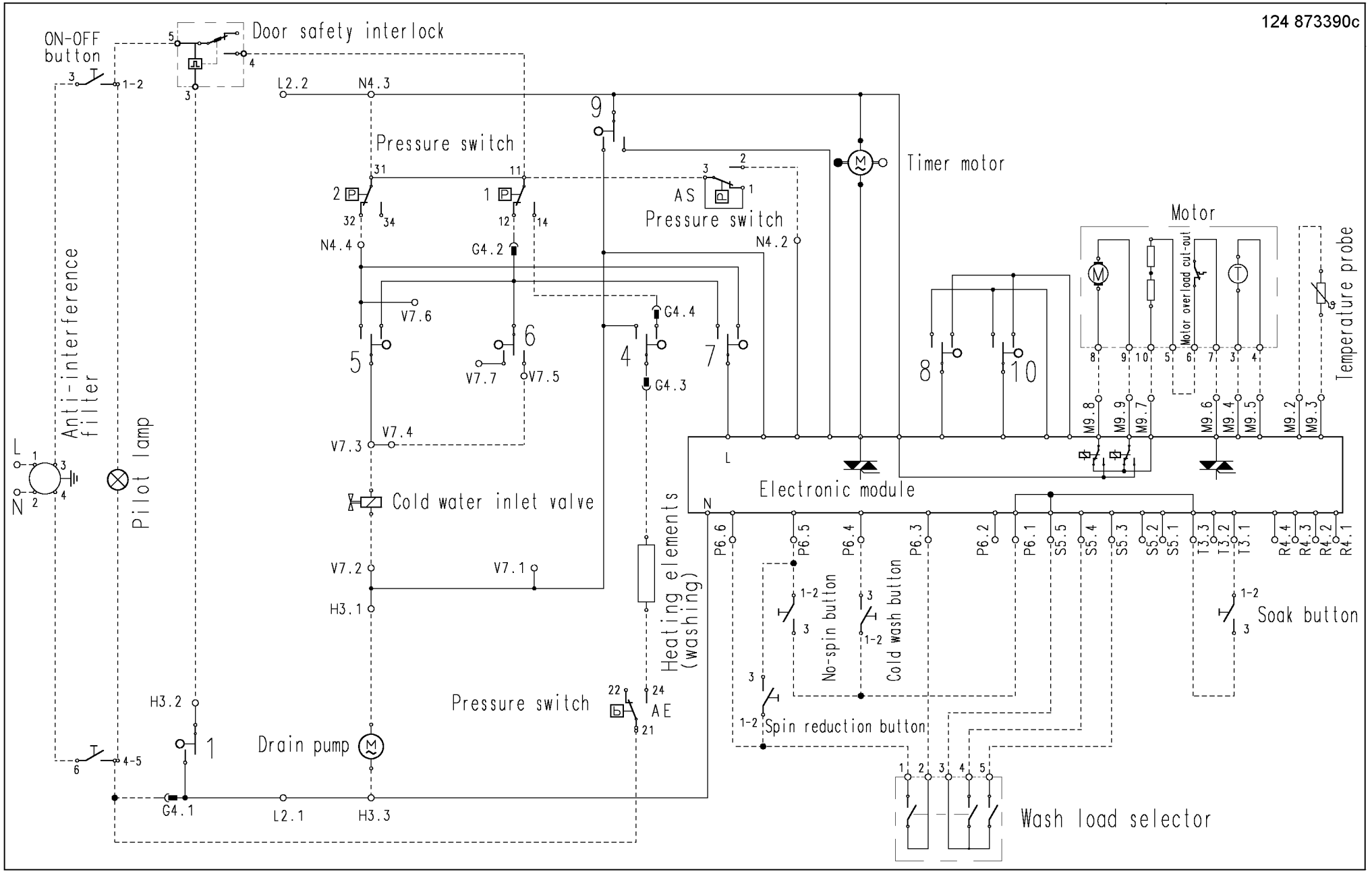
ON-OFF button
Door safety interlock
L2.2
N4.3
Pressure switch
Timer motor
AS
Pressure switch
N4.2
N4.4
G4.2
G4.4
G4.3
V7.6
V7.7
V7.5
V7.4
V7.3
V7.2
V7.1
H3.1
H3.2
H3.3
G4.1
L2.1
Motor
Motor overload cut-out
Temperature probe
Anti-interference filter
Pilot lamp
Cold water inlet valve
Heating elements (washing)
Electronic module
Pressure switch
AE
Drain pump
No-spin button
Cold wash button
Soak button
Spin reduction button
Wash load selector