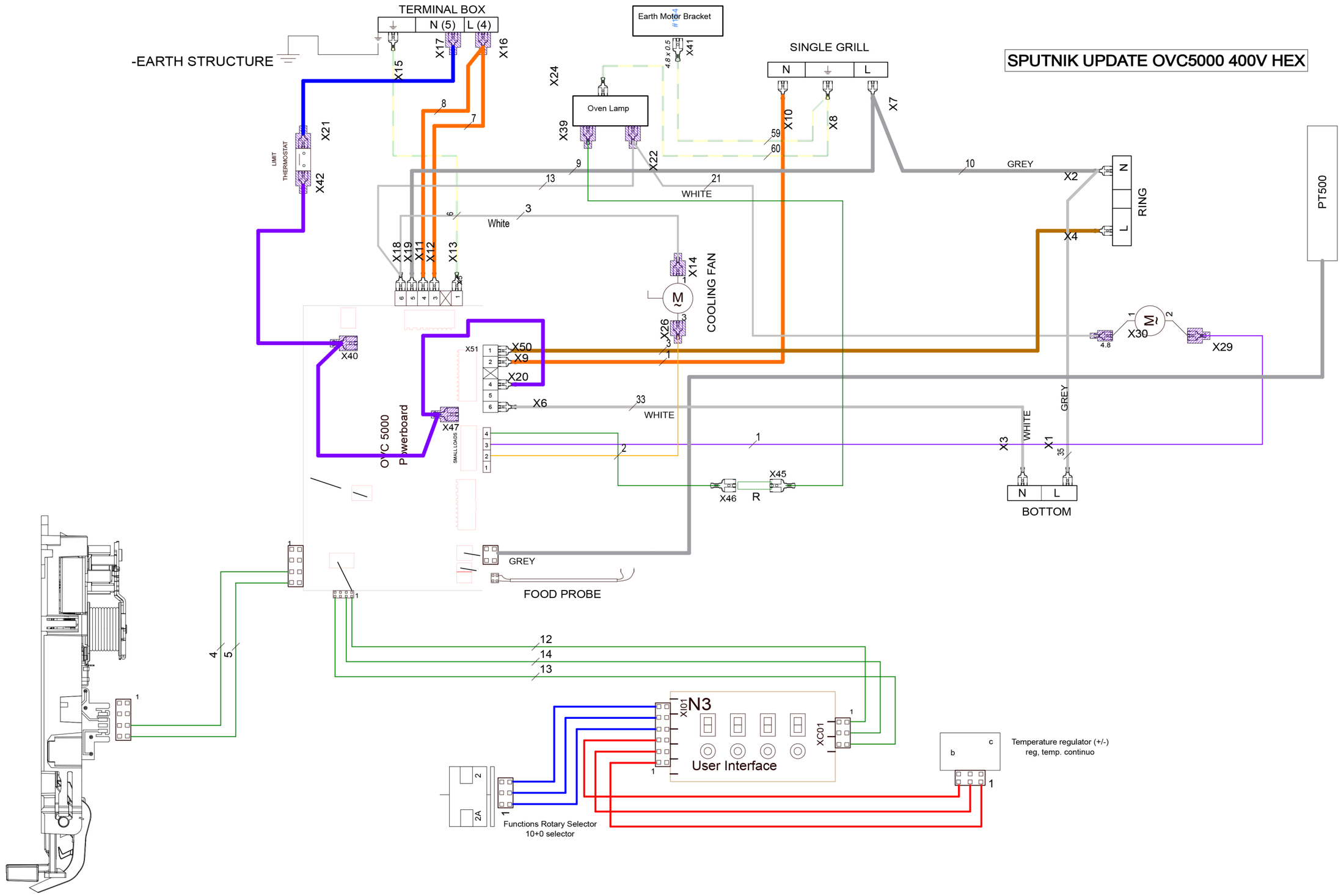
SPUTNIK UPDATE OVC5000 400V HEX
TERMINAL BOX
N (5)
L (4)
-EARTH STRUCTURE
Earth Motor Bracket
SINGLE GRILL
N
L
Oven Lamp
LIMIT THERMOSTAT
GREY
WHITE
White
RING
PT500
COOLING FAN
OVC 5000 Powerboard
SMALL LOADS
BOTTOM
FOOD PROBE
N3
User Interface
Temperature regulator (+/-)
reg, temp. continuo
Functions Rotary Selector
10+0 selector

A21714701