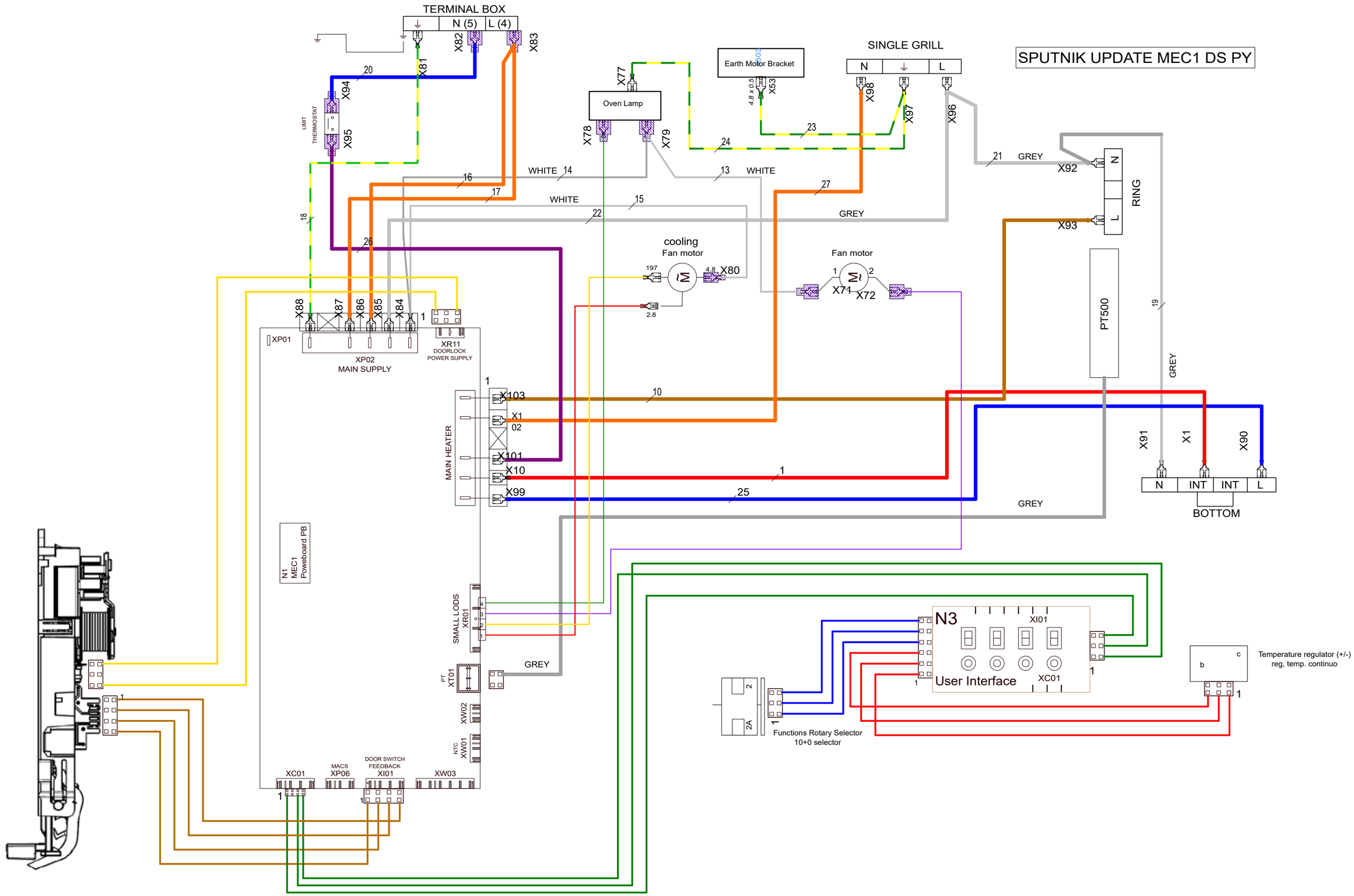
SPUTNIK UPDATE MEC1 DS PY
TERMINAL BOX
N (5)
L (4)
X81
X82
X83
X94
X95
LIMIT THERMOSTAT
Oven Lamp
X77
X78
X79
Earth Motor Bracket
X53
SINGLE GRILL
N
L
X98
X97
X96
WHITE
GREY
X92
X93
RING
cooling
Fan motor
X80
Fan motor
X71
X72
PT500
X88
X87
X86
X85
X84
XP01
XP02
MAIN SUPPLY
XR11
DOORLOCK
POWER SUPPLY
MAIN HEATER
X103
X1
02
X101
X10
X99
X91
X1
X90
N
INT
INT
L
BOTTOM
N1
MEC1
Poweboard PB
SMALL LODS
XR01
PT
XT01
XW02
NTC
XW01
XC01
MACS
XP06
DOOR SWITCH
FEEDBACK
XI01
XW03
N3
XI01
User Interface
XC01
Functions Rotary Selector
10+0 selector
Temperature regulator (+/-)
reg, temp. continuo

A22581203