SPUTNIK UPDATE MEC1 HEXAGON PYRO MSTRIP

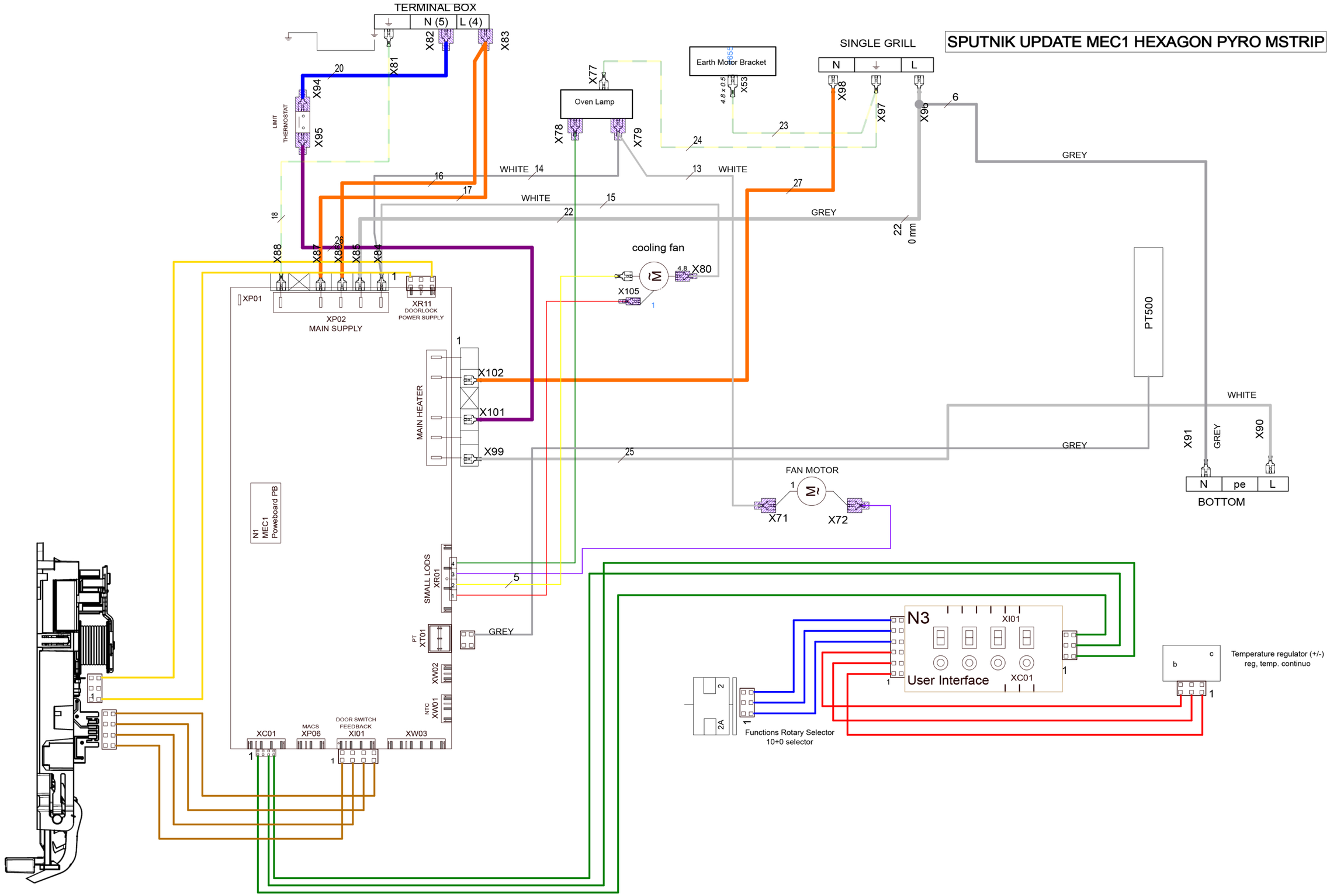

A22581208