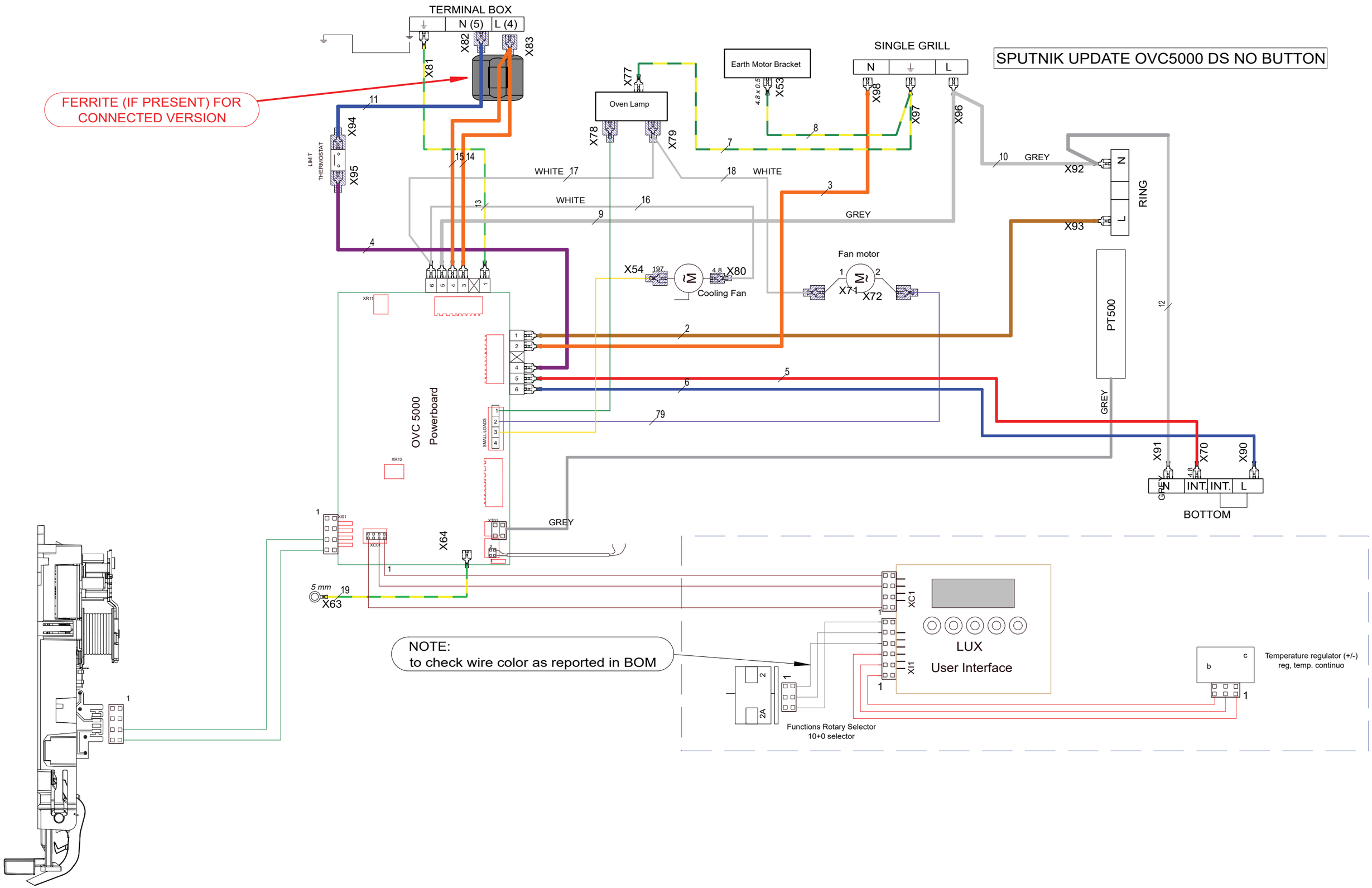
SPUTNIK UPDATE OVC5000 DS NO BUTTON
TERMINAL BOX
N (5)
L (4)
X82
X83
X81
FERRITE (IF PRESENT) FOR CONNECTED VERSION
LIMIT THERMOSTAT
X94
X95
Oven Lamp
X77
X78
X79
Earth Motor Bracket
X53
SINGLE GRILL
N
L
X98
X97
X96
WHITE
GREY
X92
X93
RING
X54
X80
Cooling Fan
Fan motor
X71
X72
PT500
OVC 5000
Powerboard
SMALL LOADS
X64
X63
5 mm
X91
X70
X90
INT.
BOTTOM
XC1
XI1
LUX
User Interface
NOTE:
to check wire color as reported in BOM
Functions Rotary Selector
10+0 selector
Temperature regulator (+/-)
reg, temp. continuo

A12601103