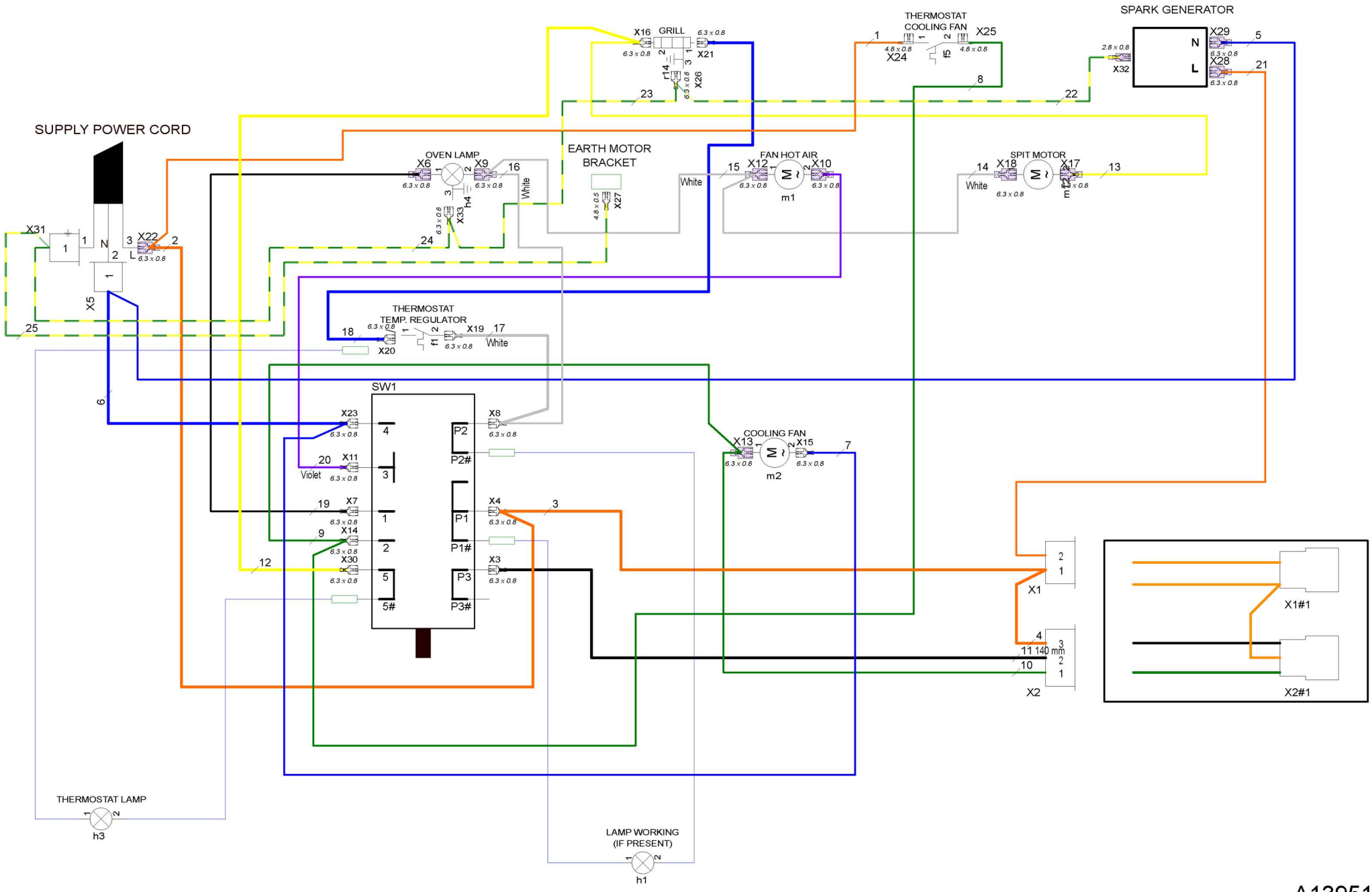
SUPPLY POWER CORD
X31
X22
X5
N
L
GRILL
X16
X21
X26
r14
THERMOSTAT
COOLING FAN
X25
X24
f5
SPARK GENERATOR
X29
X28
X32
OVEN LAMP
X6
X9
X33
h4
EARTH MOTOR
BRACKET
X27
FAN HOT AIR
X12
X10
m1
SPIT MOTOR
X18
X17
m3
White
THERMOSTAT
TEMP. REGULATOR
X20
X19
f1
SW1
X23
X11
X7
X14
X30
X8
X4
X3
P2
P2#
P1
P1#
P3
P3#
Violet
COOLING FAN
X13
X15
m2
X1
X2
140 mm
X1#1
X2#1
THERMOSTAT LAMP
h3
LAMP WORKING
(IF PRESENT)
h1

A13951901