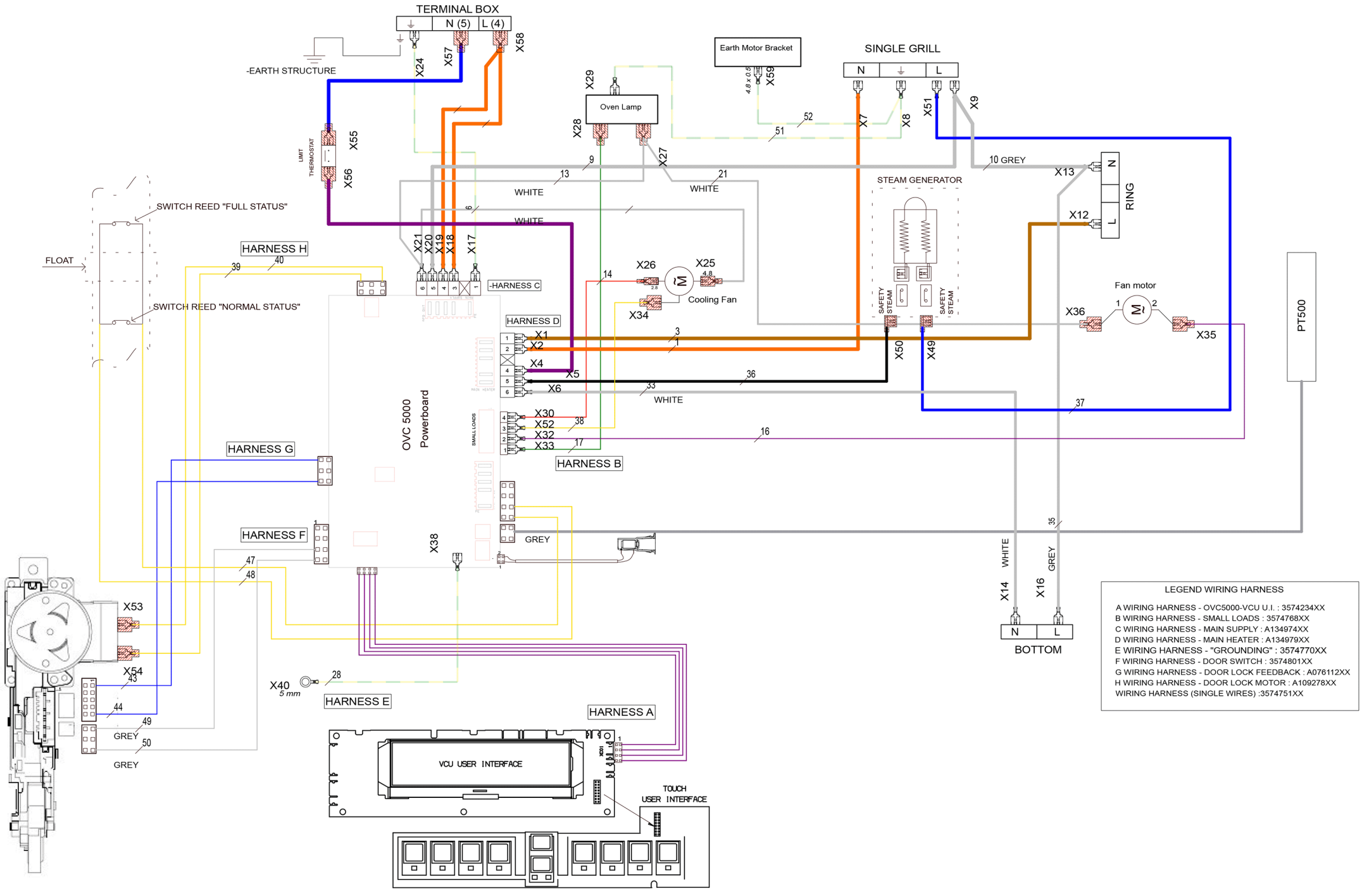
TERMINAL BOX
N (5)
L (4)
X58
X57
X24
-EARTH STRUCTURE
LIMIT THERMOSTAT
X55
X56
SWITCH REED "FULL STATUS"
FLOAT
SWITCH REED "NORMAL STATUS"
HARNESS H
X21
X20
X19
X18
X17
-HARNESS C
HARNESS D
X1
X2
X4
X5
X6
OVC 5000
Powerboard
X30
X52
X32
X33
HARNESS B
HARNESS G
HARNESS F
X38
GREY
X53
X54
X40
5 mm
HARNESS E
HARNESS A
VCU USER INTERFACE
TOUCH
USER INTERFACE
X29
Oven Lamp
X28
X27
WHITE
Earth Motor Bracket
X59
4.8 x 0.5
SINGLE GRILL
N
L
X51
X9
X7
X8
10 GREY
X13
X12
RING
STEAM GENERATOR
SAFETY STEAM
X26
X25
Cooling Fan
X34
X50
X49
Fan motor
X36
X35
PT500
X14
X16
BOTTOM
LEGEND WIRING HARNESS
A WIRING HARNESS - OVC5000-VCU U.I. : 3574234XX
B WIRING HARNESS - SMALL LOADS : 3574768XX
C WIRING HARNESS - MAIN SUPPLY : A134974XX
D WIRING HARNESS - MAIN HEATER : A134979XX
E WIRING HARNESS - "GROUNDING" : 3574770XX
F WIRING HARNESS - DOOR SWITCH : 3574801XX
G WIRING HARNESS - DOOR LOCK FEEDBACK : A076112XX
H WIRING HARNESS - DOOR LOCK MOTOR : A109278XX
WIRING HARNESS (SINGLE WIRES) :3574751XX

A13320301