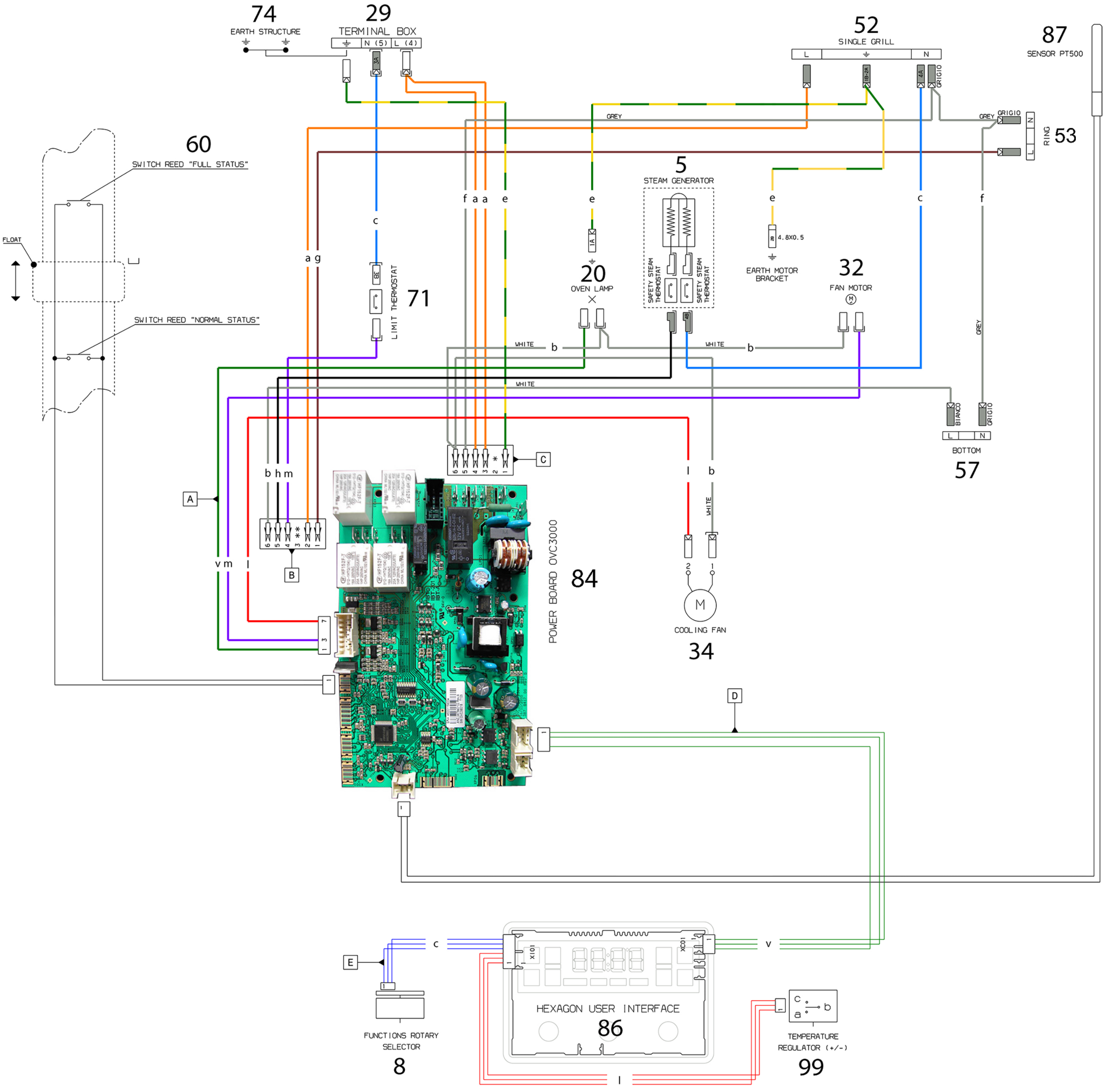
74
EARTH STRUCTURE
29
TERMINAL BOX
N (5)
L (4)
52
SINGLE GRILL
87
SENSOR PT500
GREY
GRIGIO
RING
53
60
SWITCH REED "FULL STATUS"
FLOAT
SWITCH REED "NORMAL STATUS"
5
STEAM GENERATOR
SAFETY STEAM THERMOSTAT
4.8X0.5
EARTH MOTOR BRACKET
32
FAN MOTOR
20
OVEN LAMP
71
LIMIT THERMOSTAT
WHITE
BIANCO
BOTTOM
57
POWER BOARD OVC3000
84
COOLING FAN
34
HEXAGON USER INTERFACE
86
FUNCTIONS ROTARY SELECTOR
8
TEMPERATURE REGULATOR (+/-)
99

807691201 B