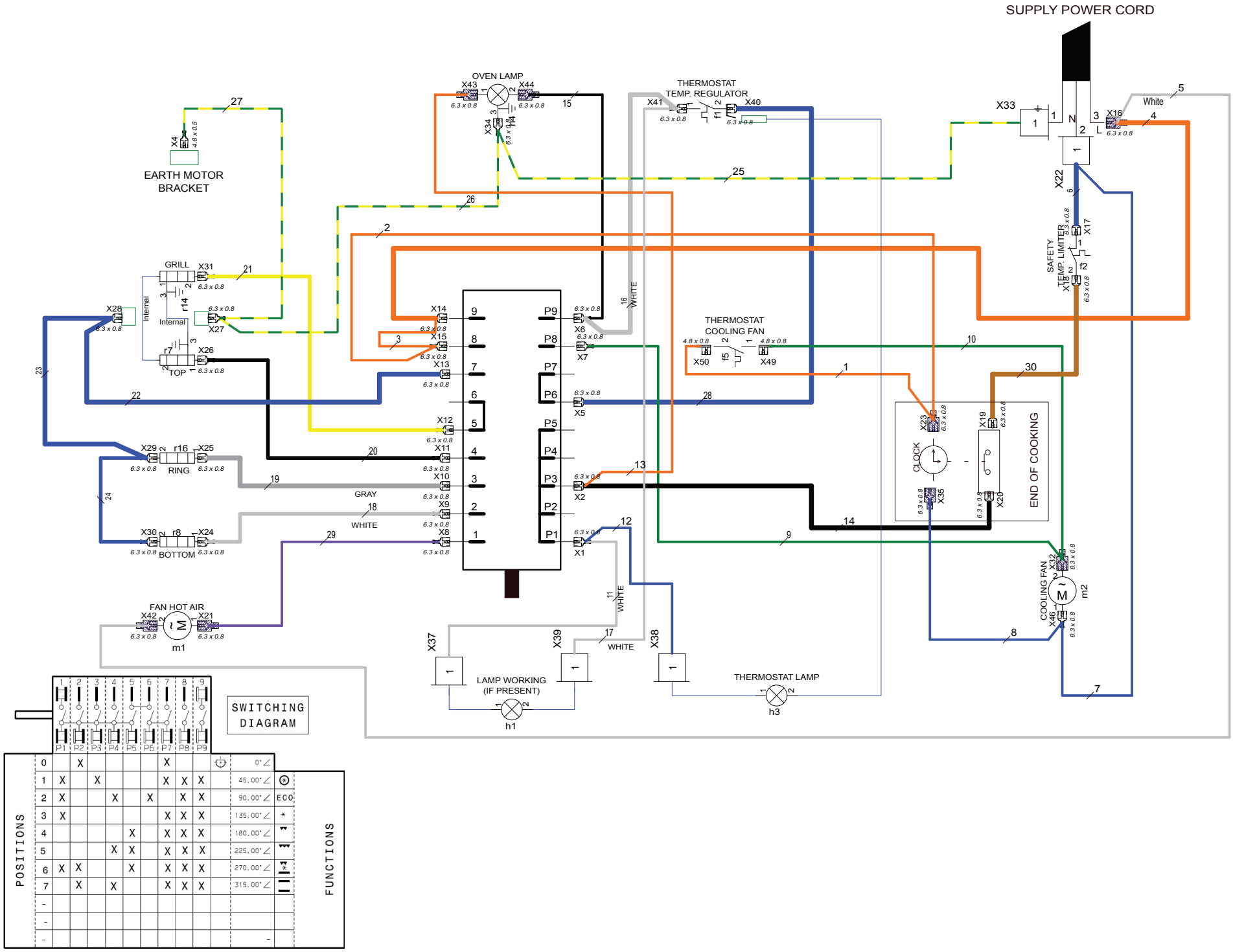
SUPPLY POWER CORD
OVEN LAMP
THERMOSTAT TEMP. REGULATOR
EARTH MOTOR BRACKET
GRILL
TOP
RING
BOTTOM
Internal
GRAY
WHITE
FAN HOT AIR
m1
THERMOSTAT COOLING FAN
SAFETY TEMP. LIMITER
CLOCK
END OF COOKING
COOLING FAN
m2
LAMP WORKING (IF PRESENT)
h1
THERMOSTAT LAMP
h3
SWITCHING DIAGRAM
POSITIONS
FUNCTIONS
ECO

A13160502