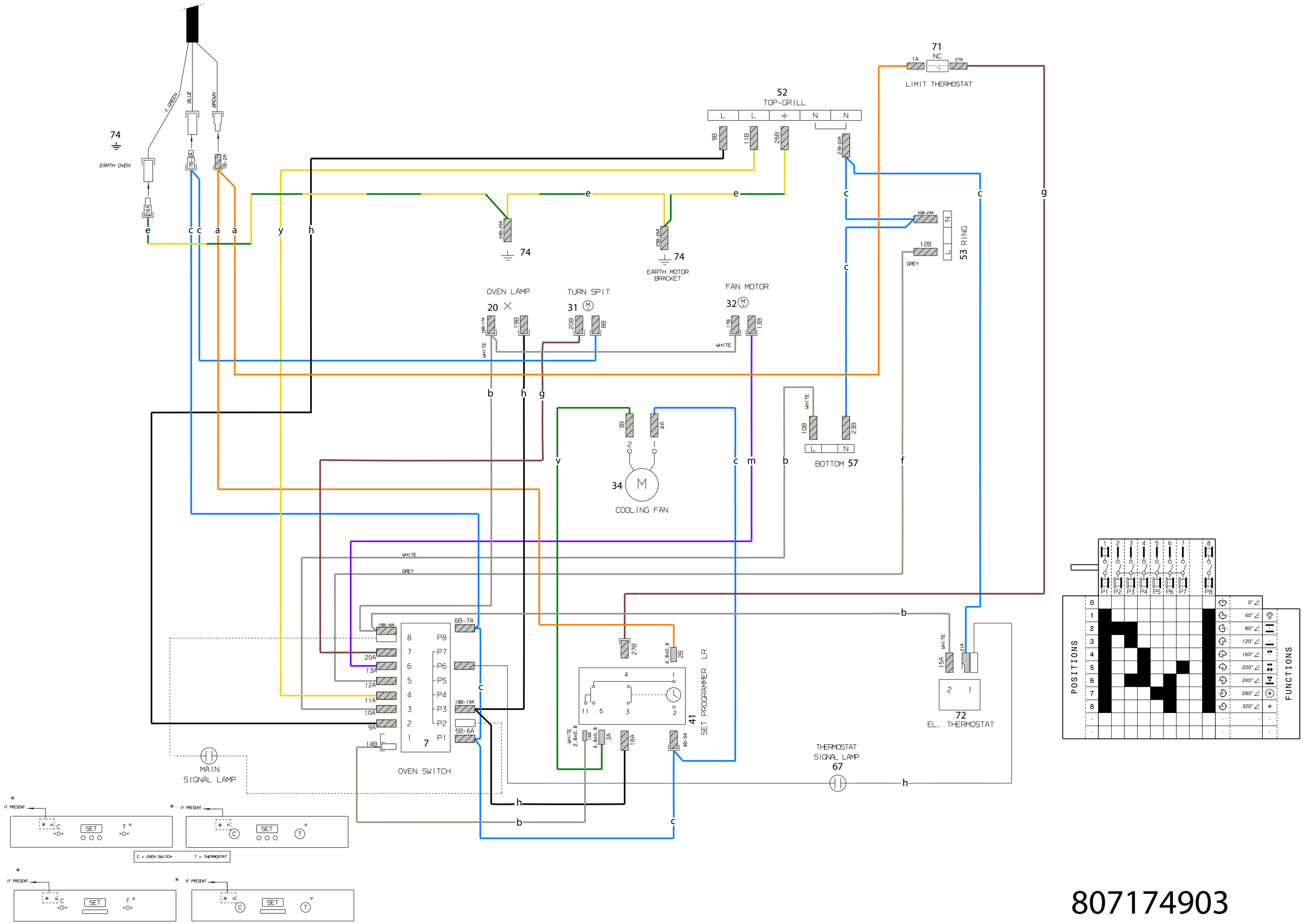
Y.GREEN
BLUE
BROWN
74
EARTH OVEN
7B-8A
1B-2A
24A
71
NC
1A
27A
LIMIT THERMOSTAT
52
TOP-GRILL
L
L
N
N
9B
11B
26B
21B-22A
22B-23A
12B
GREY
53 RING
25B-25A
25B-26A
74
EARTH MOTOR BRACKET
OVEN LAMP
20
TURN SPIT
31
FAN MOTOR
32
16B-17A
19B
20B
8B
17B
13B
WHITE
3B
4A
2
1
34
M
COOLING FAN
10B
23B
BOTTOM 57
15B-16A
20A
13A
12A
11A
10A
9A
14B
8
7
6
5
4
3
2
1
P8
P7
P6
P5
P4
P3
P2
P1
7
OVEN SWITCH
6B-7A
18B-19A
5B-6A
MAIN SIGNAL LAMP
27B
4.8x0.8
2B
41
SET PROGRAMMER LR
WHITE 2.8x0.8
14A
4.8x0.8
3A
18A
4B-5A
15A
21A
72
EL. THERMOSTAT
THERMOSTAT SIGNAL LAMP
67
IF PRESENT
SET
C
T
C - OVEN SWITCH
T - THERMOSTAT
POSITIONS
FUNCTIONS
P1
P2
P3
P4
P5
P6
P7
P8
0°
40°
80°
120°
160°
200°
240°
280°
320°

807174903