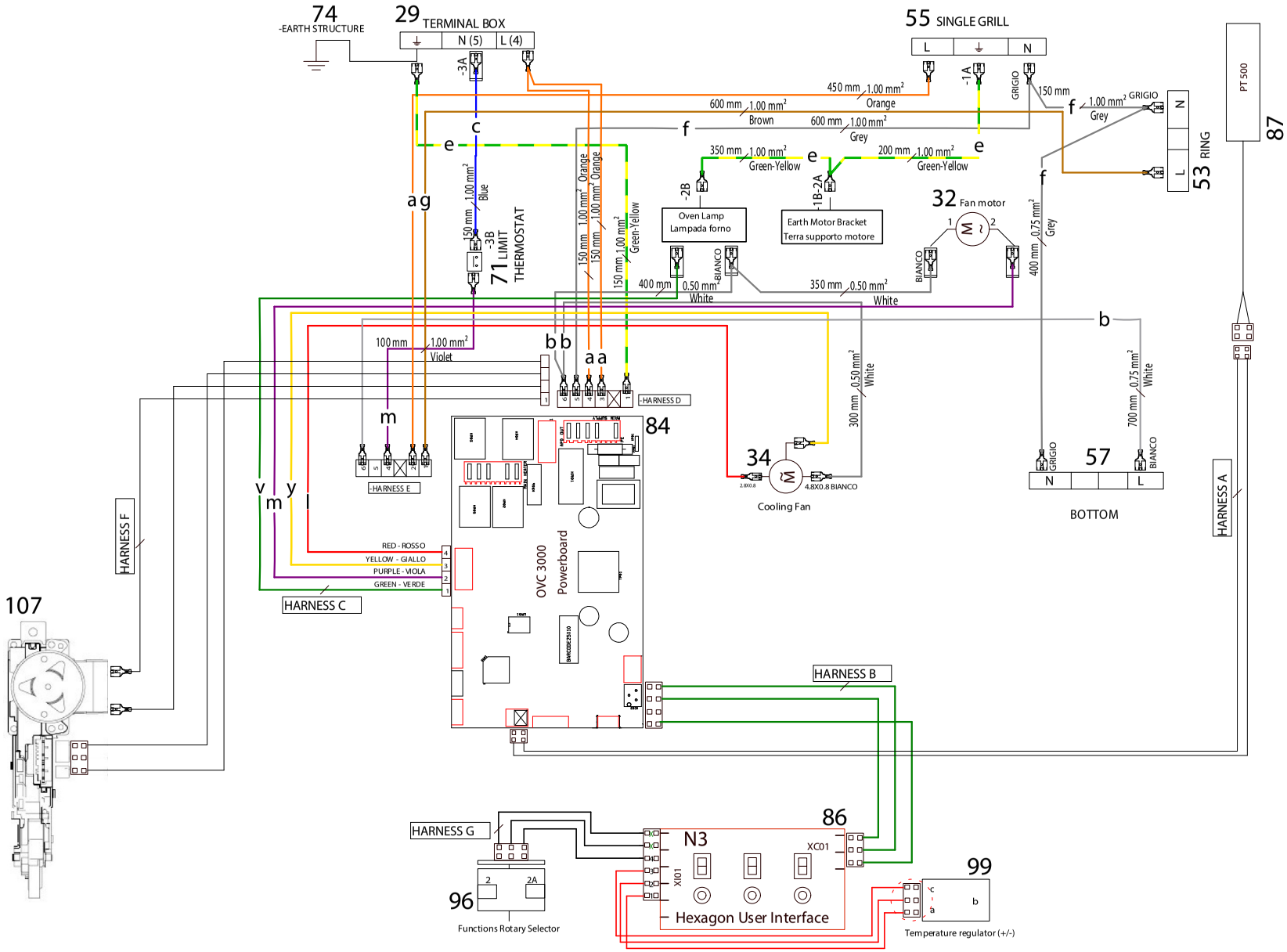
74
-EARTH STRUCTURE
29
TERMINAL BOX
N (5)
L (4)
55
SINGLE GRILL
L
N
-3A
-1A
GRIGIO
450 mm 1.00 mm² Orange
600 mm 1.00 mm² Brown
600 mm 1.00 mm² Grey
150 mm
1.00 mm² GRIGIO Grey
350 mm 1.00 mm² Green-Yellow
200 mm 1.00 mm² Green-Yellow
-2B
-1B-2A
Oven Lamp
Lampada forno
Earth Motor Bracket
Terra supporto motore
32
Fan motor
M ~
1
2
BIANCO
400 mm 0.75 mm² Grey
350 mm 0.50 mm² White
400 mm 0.50 mm² White
150 mm 1.00 mm² Blue
-3B
71
LIMIT
THERMOSTAT
150 mm 1.00 mm² Orange
150 mm 1.00 mm² Green-Yellow
53
RING
N
L
PT 500
87
100 mm 1.00 mm² Violet
-HARNESS D
-HARNESS E
84
OVC 3000
Powerboard
34
Cooling Fan
4.8X0.8 BIANCO
300 mm 0.50 mm² White
700 mm 0.75 mm² White
57
BOTTOM
HARNESS A
HARNESS F
HARNESS C
RED - ROSSO
YELLOW - GIALLO
PURPLE - VIOLA
GREEN - VERDE
107
HARNESS B
HARNESS G
96
Functions Rotary Selector
86
N3
XC01
XI01
Hexagon User Interface
99
Temperature regulator (+/-)

A06872801