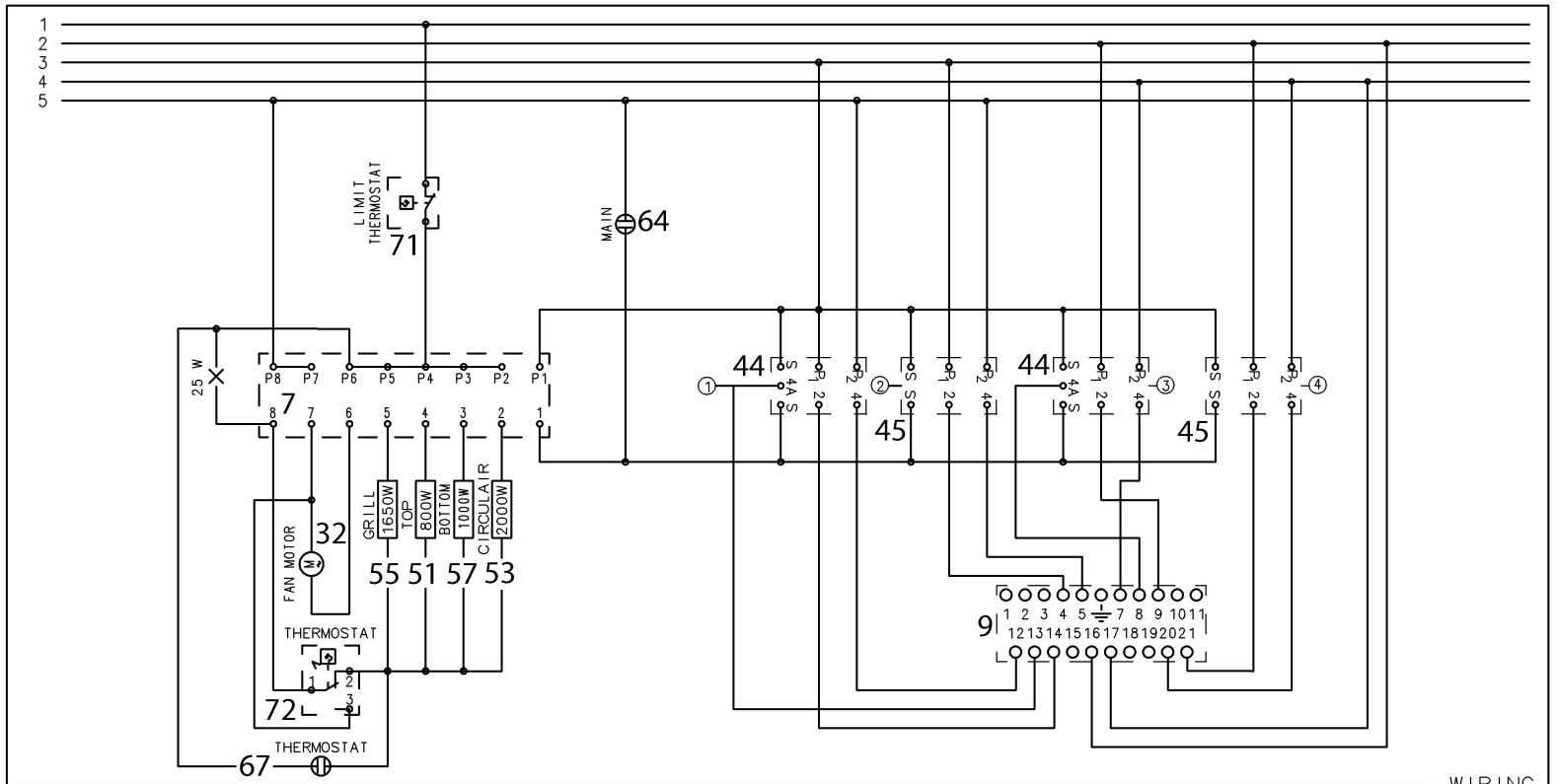
1
2
3
4
5
LIMIT THERMOSTAT
71
MAIN
64
25 W
P8 P7 P6 P5 P4 P3 P2 P1
7
44
45
44
45
GRILL 1650W
TOP 800W
BOTTOM 1000W
CIRCULAIR 2000W
FAN MOTOR
32
55 51 57 53
THERMOSTAT
72
THERMOSTAT
67
9
WIRING

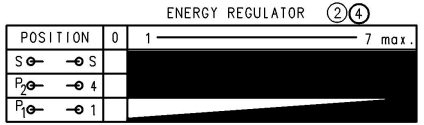
ENERGY REGULATOR 2 4
POSITION
0
1
7 max.
S S
P2 4
P1 1

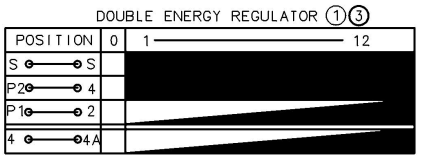
DOUBLE ENERGY REGULATOR 1 3
POSITION
0
1
12
S S
P2 4
P1 2
4 4A

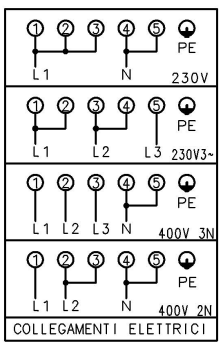
PE
L1 N 230V
L1 L2 L3 230V3~
L1 L2 L3 N 400V 3N
L1 L2 N 400V 2N
COLLEGAMENTI ELETTRICI

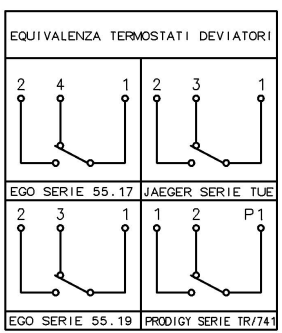
EQUIVALENZA TERMOSTATI DEVIATORI
EGO SERIE 55.17
JAEGER SERIE TUE
EGO SERIE 55.19
PRODIGY SERIE TR/741

357762301a