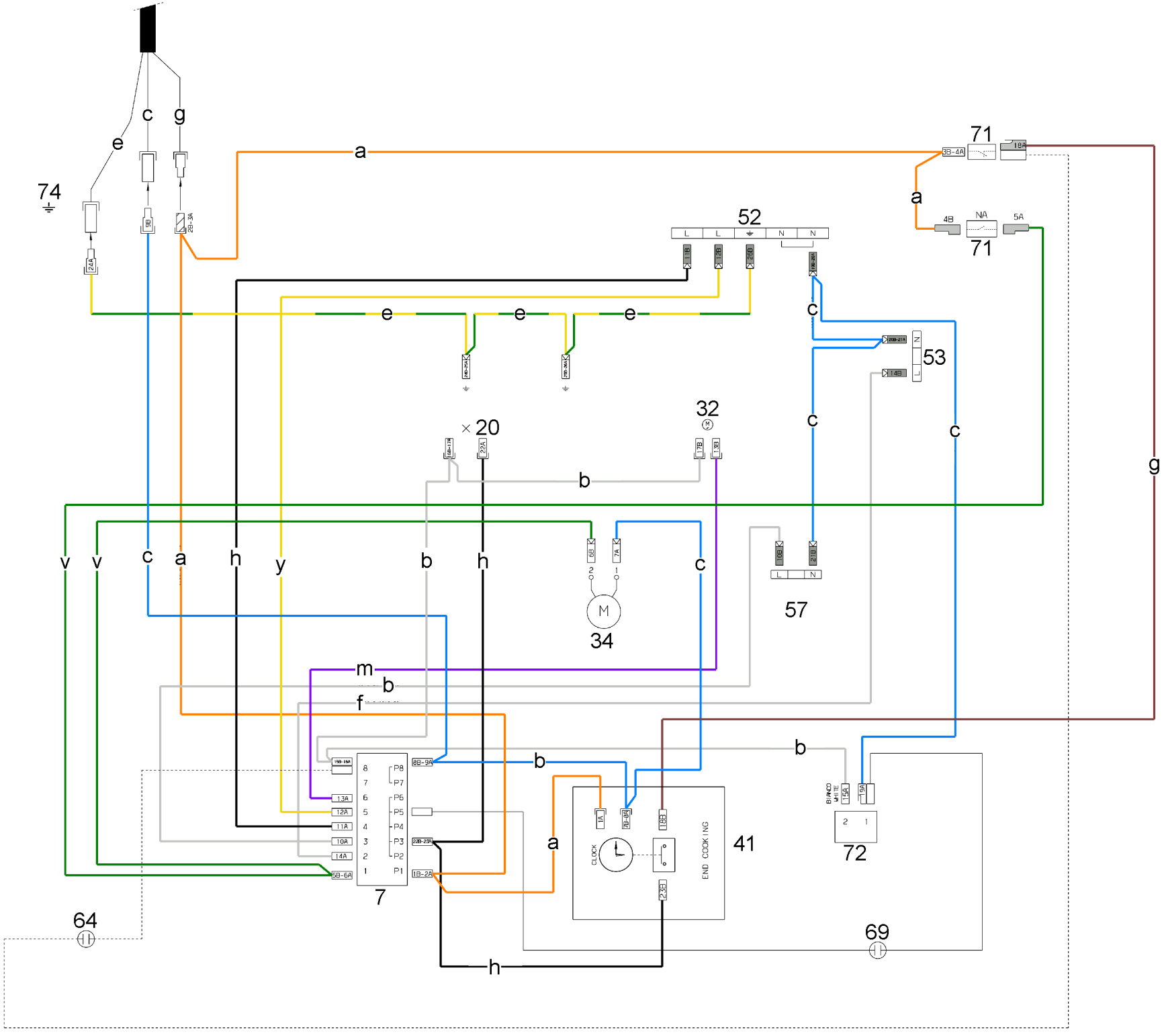

74
71
52
53
32
20
34
57
41
72
7
64
69
CLOCK
END COOKING
BIANCO WHITE

807176302