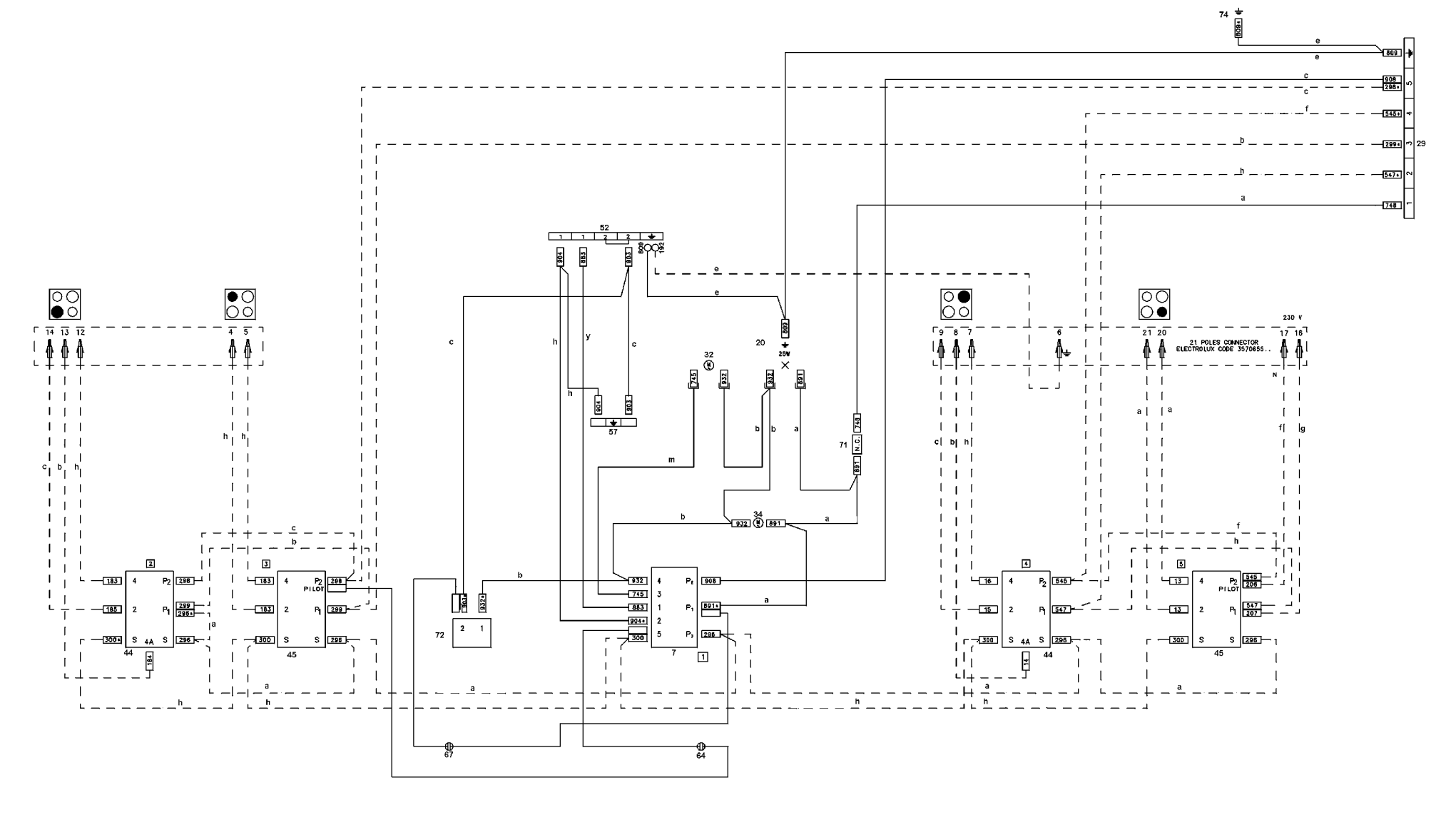

21 POLES CONNECTOR
ELECTROLUX CODE 3570655..
23D V
PILOT