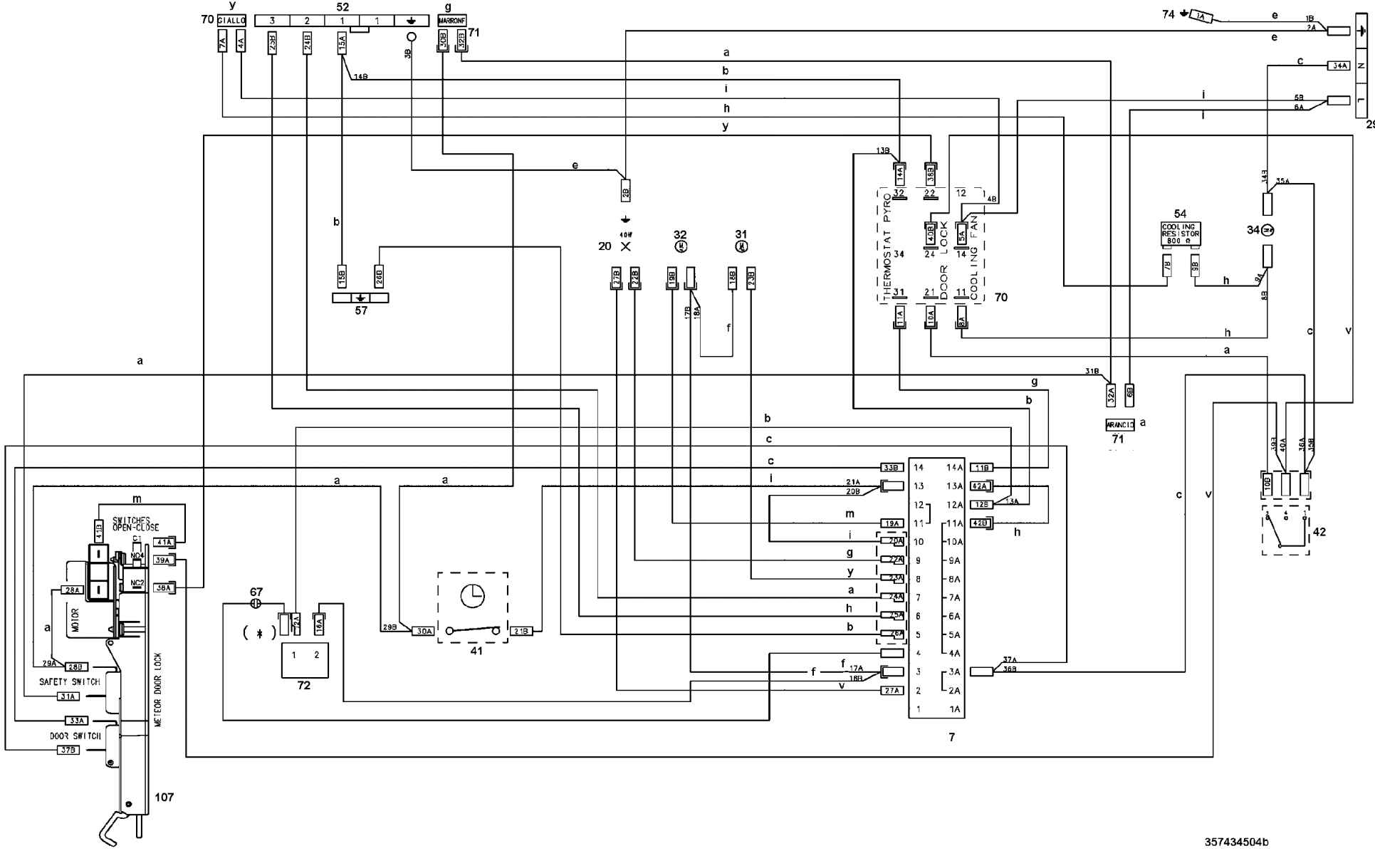
GIALLO
MARRONE
THERMOSTAT PYRO
DOOR LOCK
COOLING FAN
COOLING RESISTOR 800 Ω
ARANCIO
SWITCHES OPEN-CLOSE
MOTOR
SAFETY SWITCH
DOOR SWITCH
METEOR DOOR LOCK
40W
N
L


357434504b