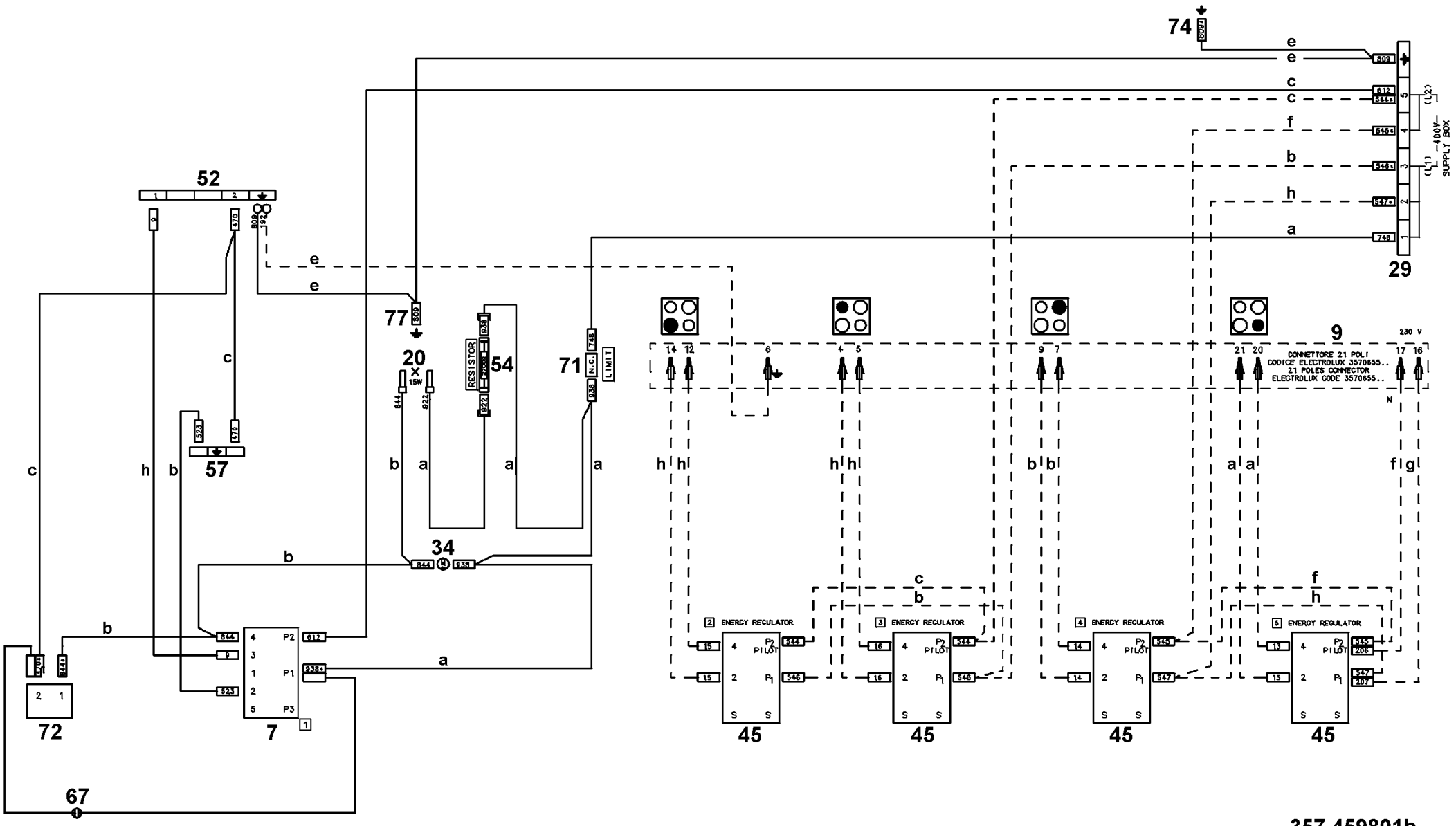
52
57
20
15W
77
54
RESISTOR
71
N.C.
LIMIT
34
7
72
67
74
29
SUPPLY BOX
400V
9
CONNETTORE 21 POLI
CODICE ELECTROLUX 3570655..
21 POLES CONNECTOR
ELECTROLUX CODE 3570655..
230 V
2 ENERGY REGULATOR
3 ENERGY REGULATOR
4 ENERGY REGULATOR
5 ENERGY REGULATOR
PILOT
45
45
45
45

357 459801b