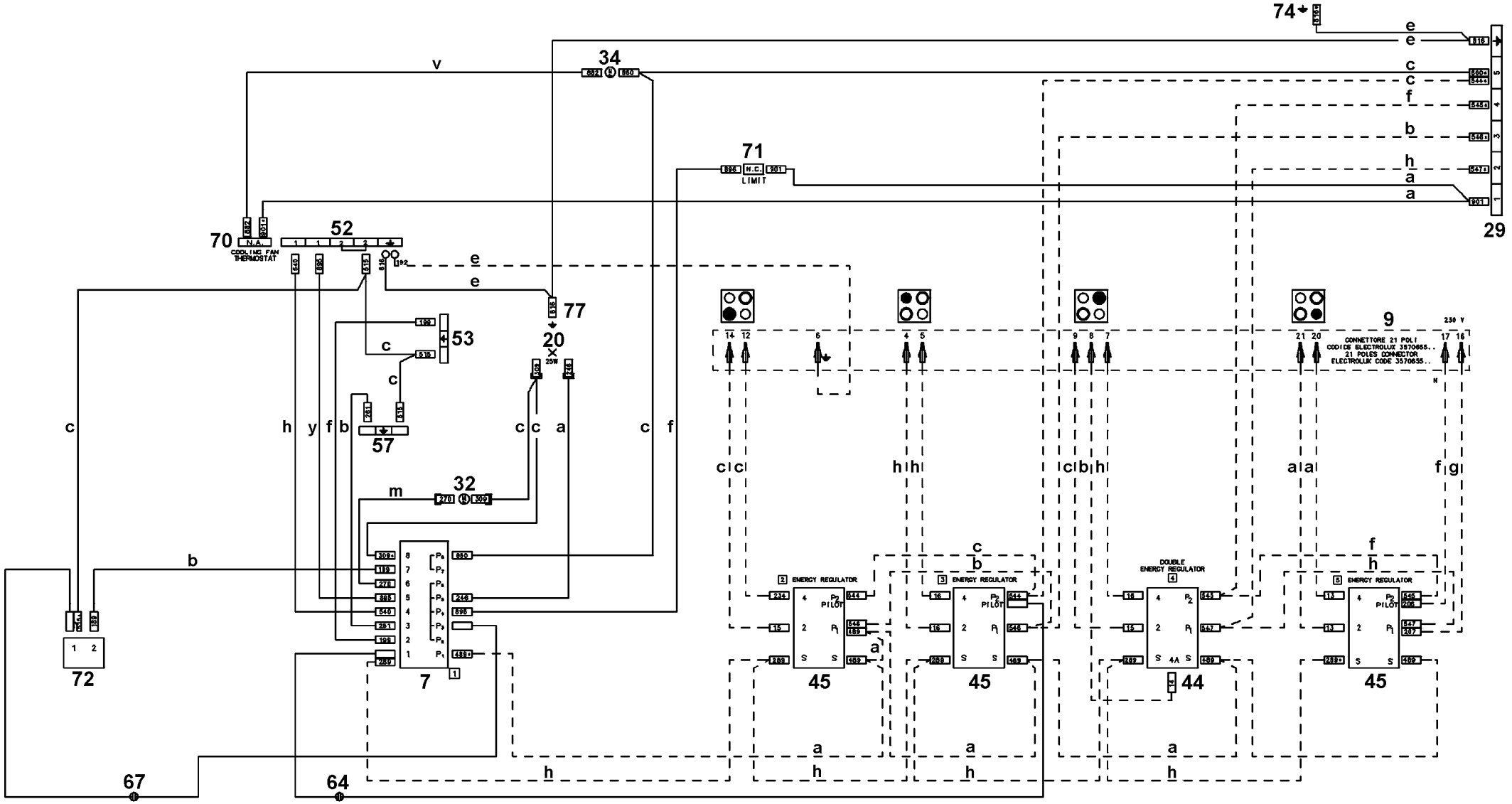
74
34
71
LIMIT
N.C.
70
N.A.
COOLING FAN THERMOSTAT
52
53
57
77
20
25W
32
9
CONNETTORE 21 POLI
CODICE ELECTROLUX 3570655..
21 POLES CONNECTOR
ELECTROLUX CODE 3570655..
29
7
72
67
64
45
44
ENERGY REGULATOR
DOUBLE ENERGY REGULATOR
PILOT

357 451801b