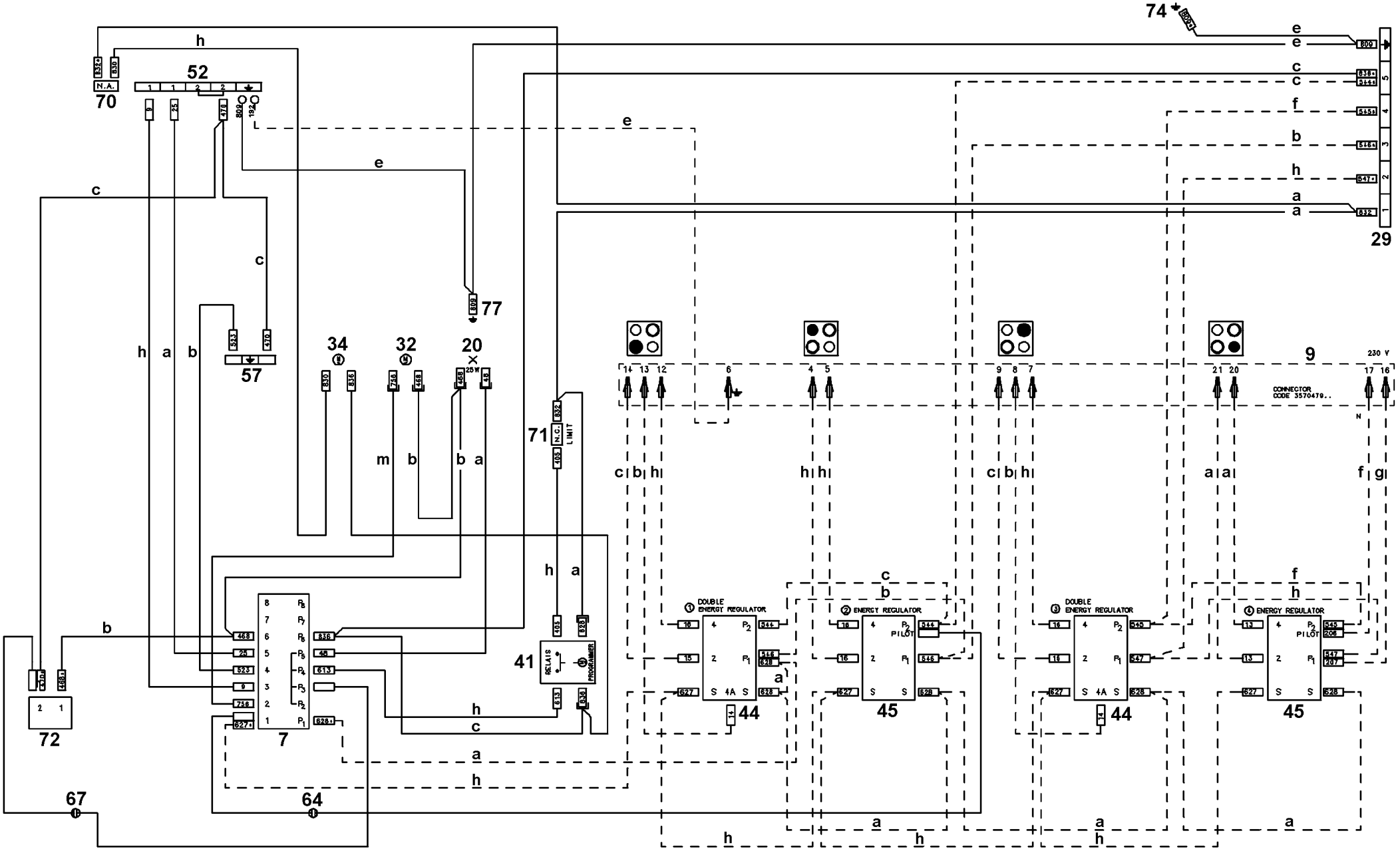
74
29
52
70
N.A.
57
77
34
32
20
25W
71
N.C.
LIMIT
41
RELAIS
PROGRAMMER
7
72
67
64
9
230 V
CONNECTOR
CODE 3570470..
① DOUBLE
ENERGY REGULATOR
② ENERGY REGULATOR
PILOT
③ DOUBLE
ENERGY REGULATOR
④ ENERGY REGULATOR
PILOT
44
45
44
45

357 435001b