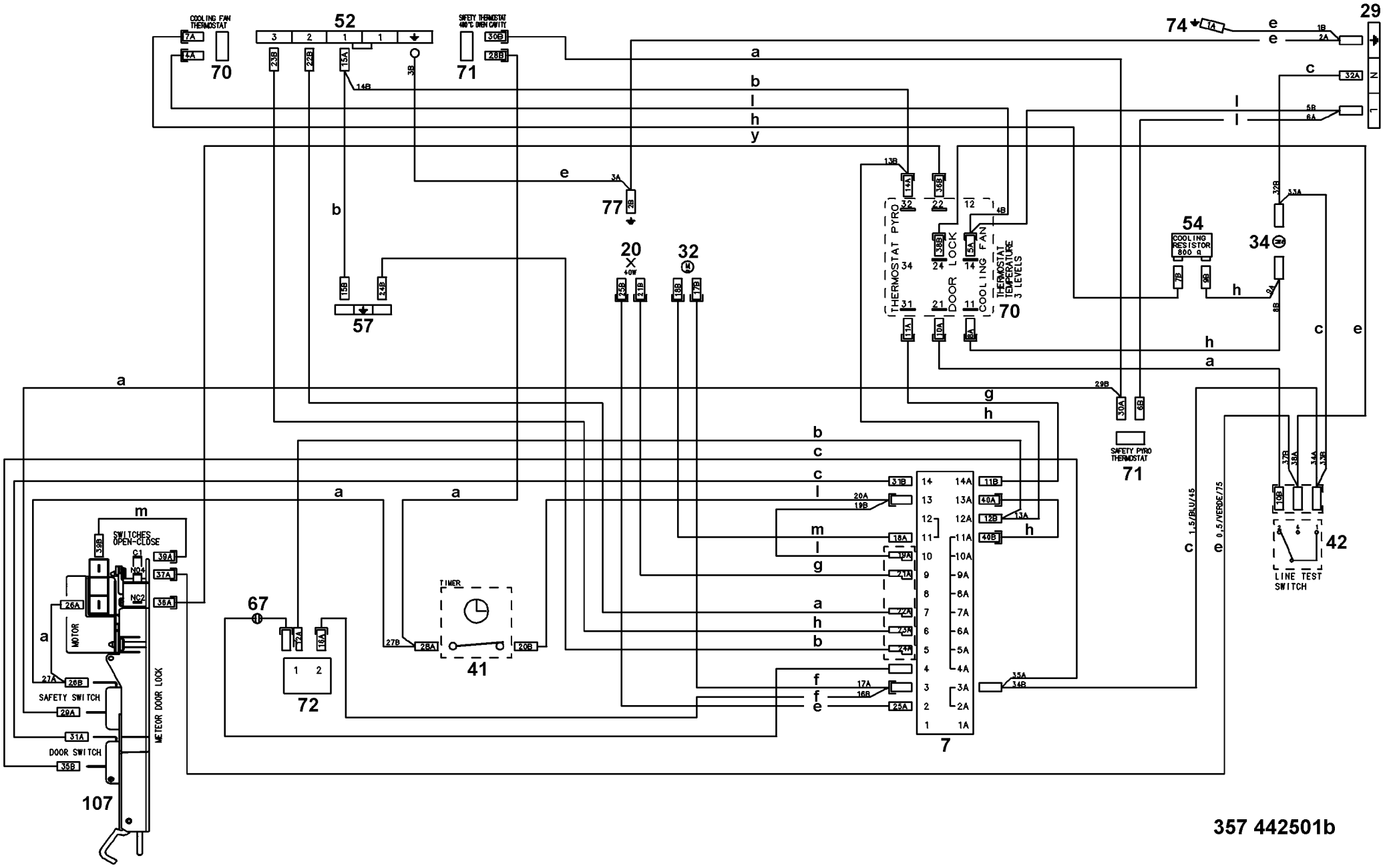
COOLING FAN THERMOSTAT
70
52
SAFETY THERMOSTAT 400°C OVEN CAVITY
71
74
29
77
57
20
40W
32
THERMOSTAT PYRO
DOOR LOCK
COOLING FAN
THERMOSTAT TEMPERATURE 3 LEVELS
70
54
COOLING RESISTOR 800 Ω
34
SAFETY PYRO THERMOSTAT
71
42
LINE TEST SWITCH
1,5/BLU/45
0,5/VERDE/75
SWITCHES OPEN-CLOSE
MOTOR
SAFETY SWITCH
DOOR SWITCH
METEOR DOOR LOCK
107
67
72
TIMER
41
7

357 442501b