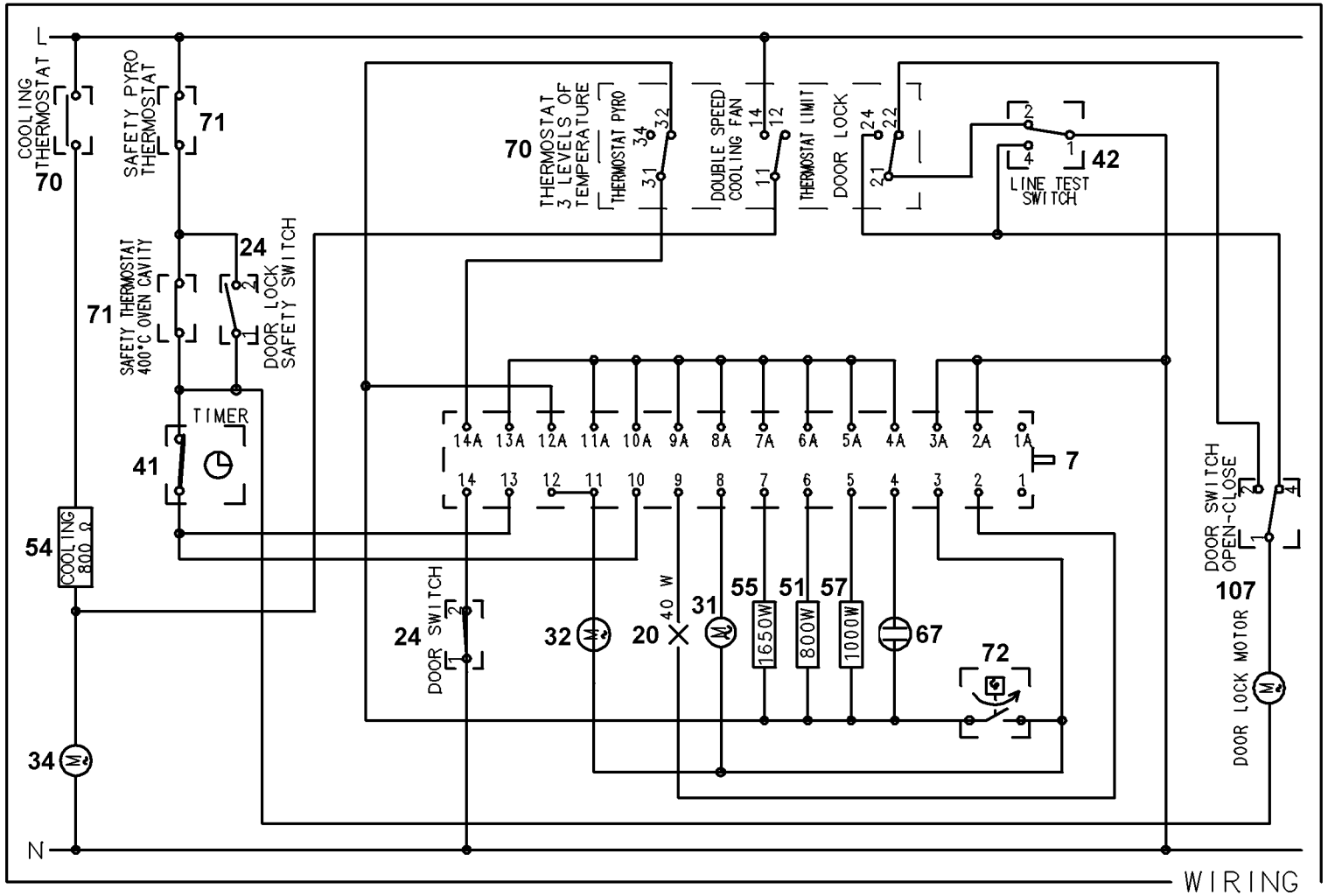
L
N
COOLING THERMOSTAT
70
SAFETY PYRO THERMOSTAT
71
SAFETY THERMOSTAT 400°C OVEN CAVITY
71
24
DOOR LOCK SAFETY SWITCH
TIMER
41
54
COOLING 800 Ω
34
70
THERMOSTAT 3 LEVELS OF TEMPERATURE
THERMOSTAT PYRO
DOUBLE SPEED COOLING FAN
THERMOSTAT LIMIT
DOOR LOCK
LINE TEST SWITCH
42
14A 13A 12A 11A 10A 9A 8A 7A 6A 5A 4A 3A 2A 1A
7
14 13 12 11 10 9 8 7 6 5 4 3 2 1
DOOR SWITCH
24
32
20
40 W
31
55
51
57
1650W
800W
1000W
67
72
DOOR SWITCH OPEN-CLOSE
107
DOOR LOCK MOTOR
WIRING

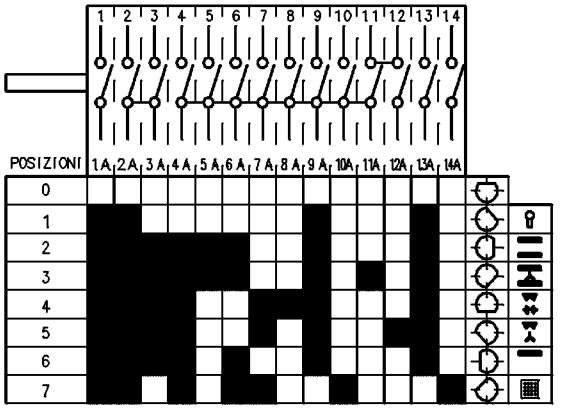
1 2 3 4 5 6 7 8 9 10 11 12 13 14
POSIZIONI
1A 2A 3A 4A 5A 6A 7A 8A 9A 10A 11A 12A 13A 14A
0
1
2
3
4
5
6
7

357 435403a