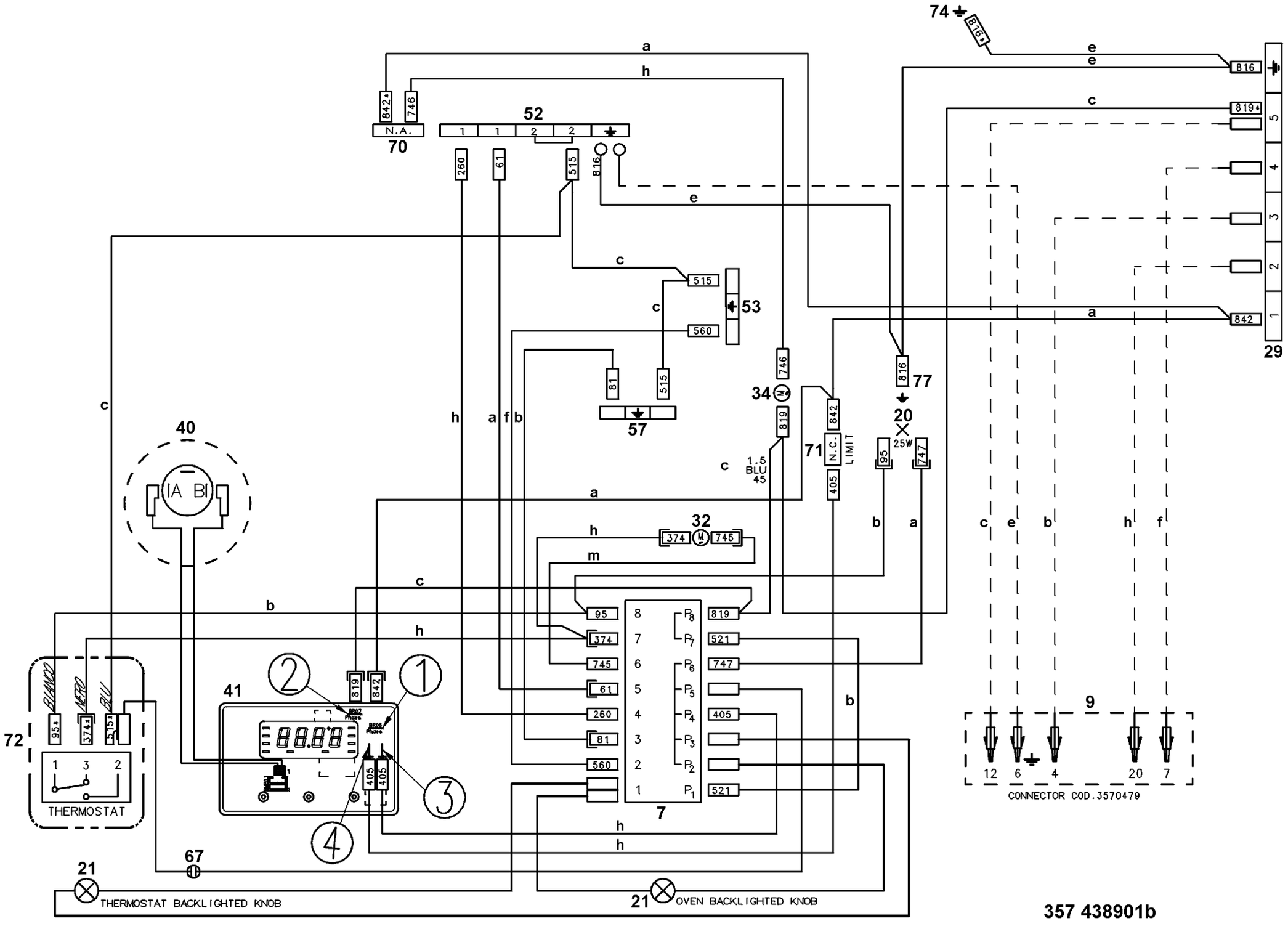
74
816
a
h
e
e
c
842
746
N.A.
70
52
1
1
2
2
260
61
515
816
e
c
515
c
560
53
a
842
29
746
816
77
34
819
842
71
N.C.
LIMIT
20
25W
95
747
405
c
1.5
BLU
45
c
40
IA BI
a
32
374
745
h
m
b
a
c
e
b
h
f
c
b
95
374
745
61
260
81
560
8
7
6
5
4
3
2
1
P8
P7
P6
P5
P4
P3
P2
P1
819
521
747
405
521
b
h
h
h
h
f
b
a
c
c
57
81
515
41
819
842
405
405
72
BIANCO
NERO
BLU
95
374
515
1
3
2
THERMOSTAT
67
21
THERMOSTAT BACKLIGHTED KNOB
21
OVEN BACKLIGHTED KNOB
9
12
6
4
20
7
CONNECTOR COD.3570479
1
2
3
4

357 438901b