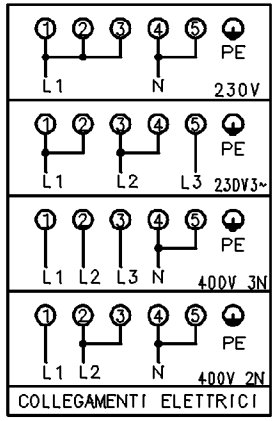
PE
L1
N
230V
L2
L3
230V3~
400V 3N
400V 2N
COLLEGAMENTI ELETTRICI

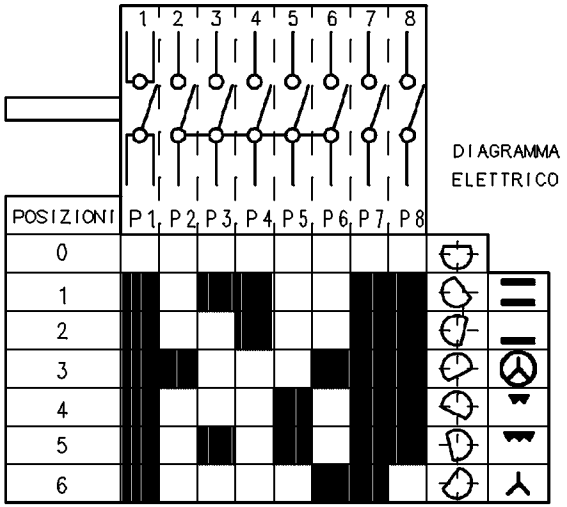
DIAGRAMMA
ELETTRICO
POSIZIONI
P1 P2 P3 P4 P5 P6 P7 P8
0
1
2
3
4
5
6

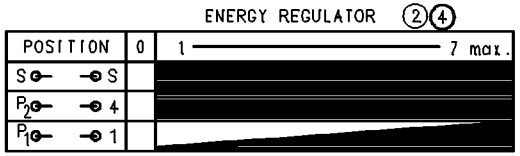
ENERGY REGULATOR
POSITION
0
1
7 max.

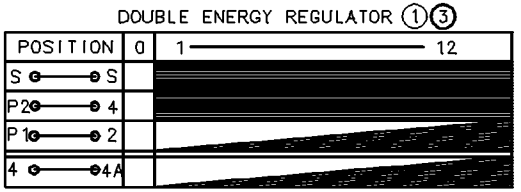
DOUBLE ENERGY REGULATOR
POSITION
0
1
12

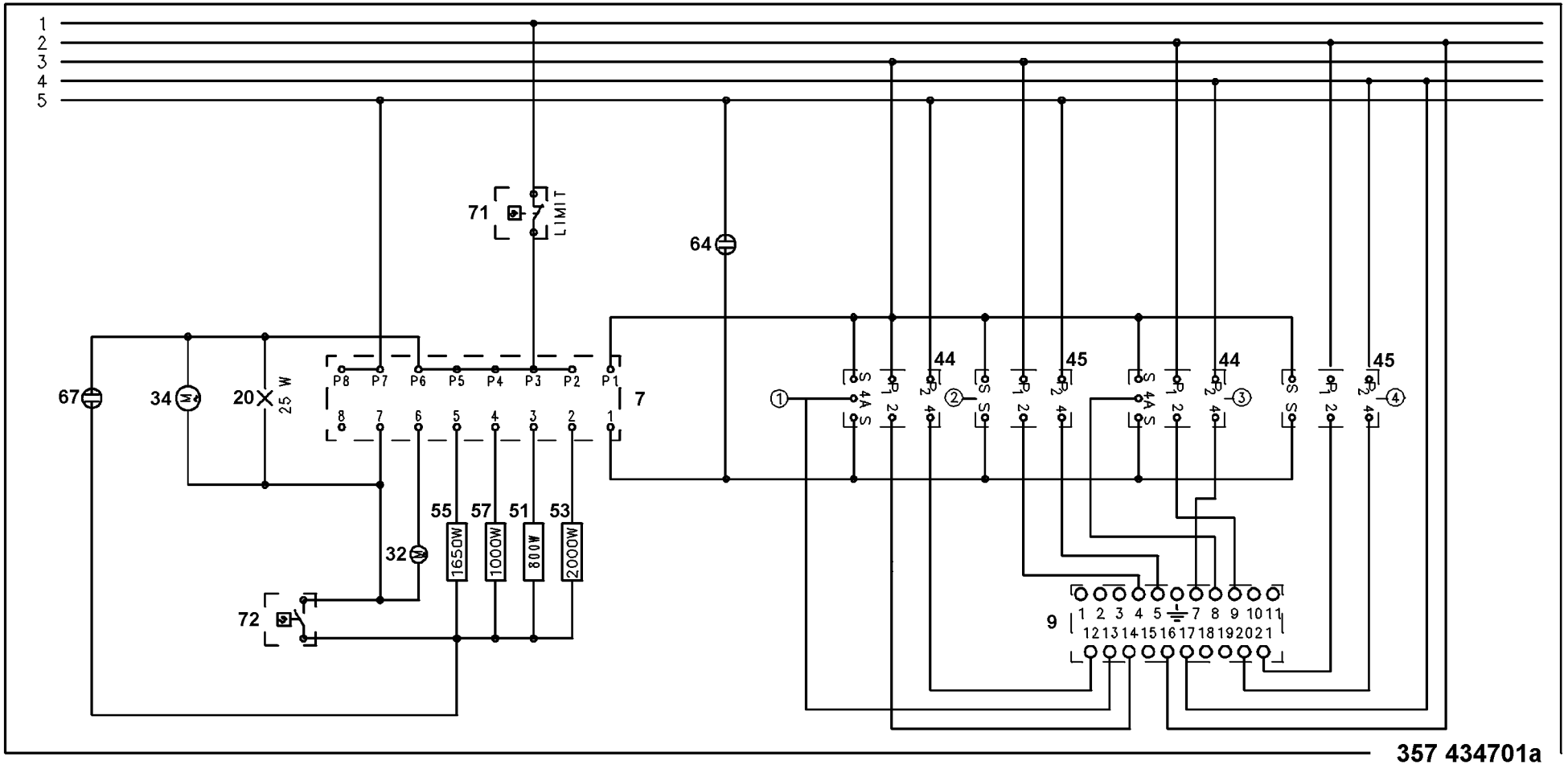
71
LIMIT
64
67
34
20
25 W
P8 P7 P6 P5 P4 P3 P2 P1
7
44
45
55
57
51
53
1650W
1000W
800W
2000W
32
72
9

357 434701a