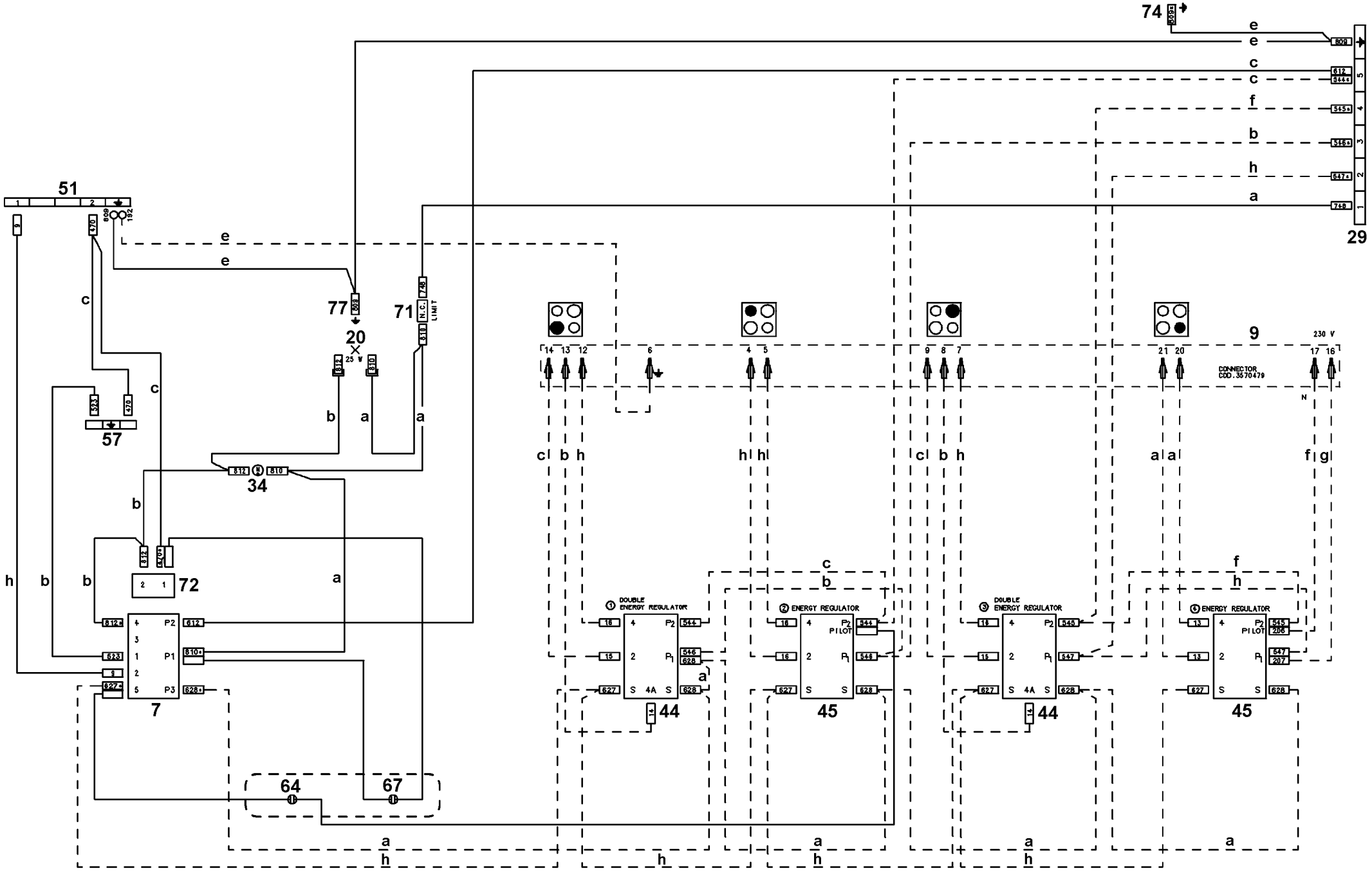
74
29
51
57
77
20
25 W
71
N.C.
LIMIT
34
72
7
44
45
44
45
9
230 V
CONNECTOR
COD.3570479
DOUBLE
ENERGY REGULATOR
ENERGY REGULATOR
DOUBLE
ENERGY REGULATOR
ENERGY REGULATOR
PILOT
PILOT
64
67

357 434501b