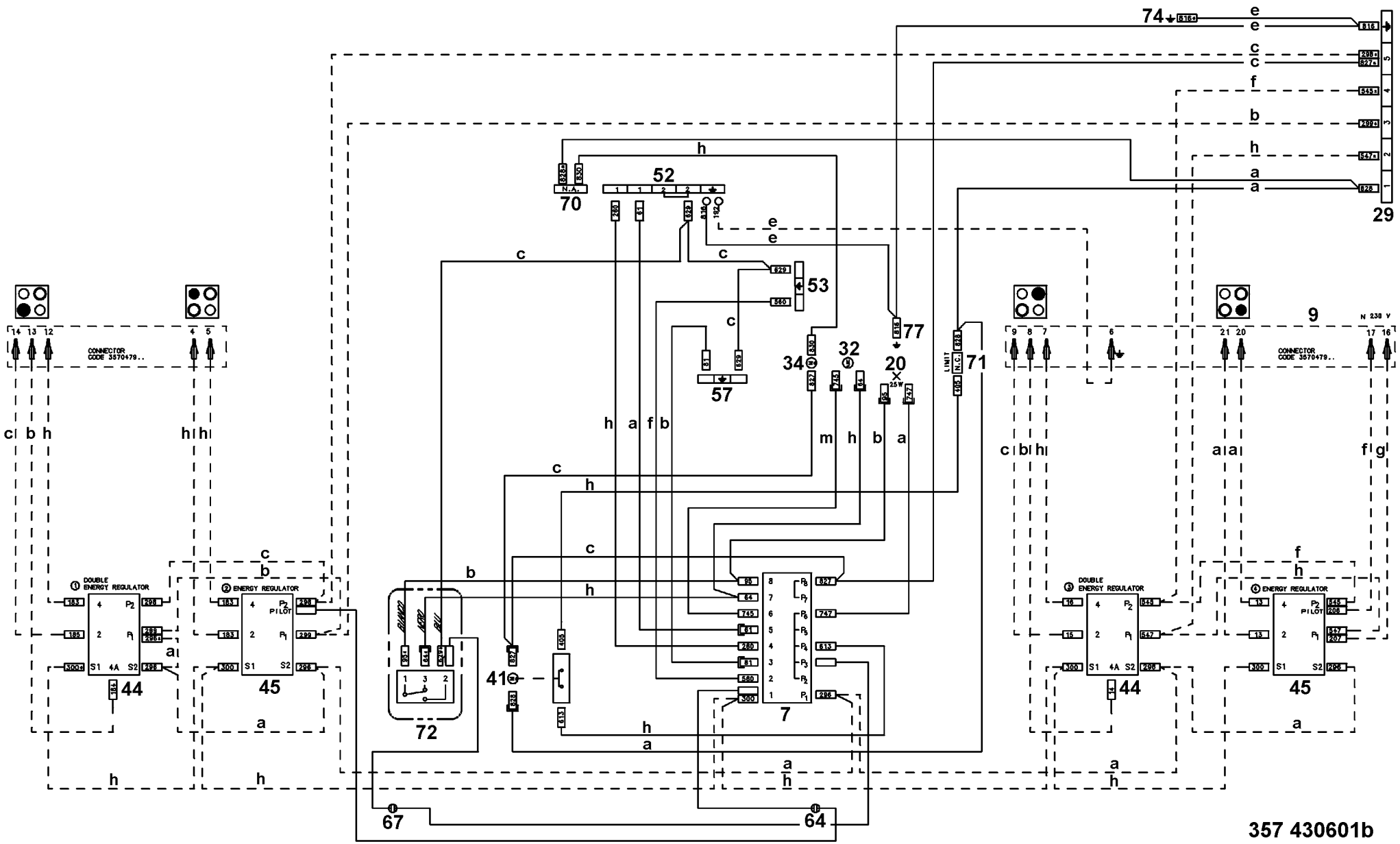
74
29
52
70
53
57
77
20
32
34
71
9
N 230 V
CONNECTOR CODE 3570479..
DOUBLE ENERGY REGULATOR
ENERGY REGULATOR
PILOT
44
45
72
41
7
67
64
357 430601b