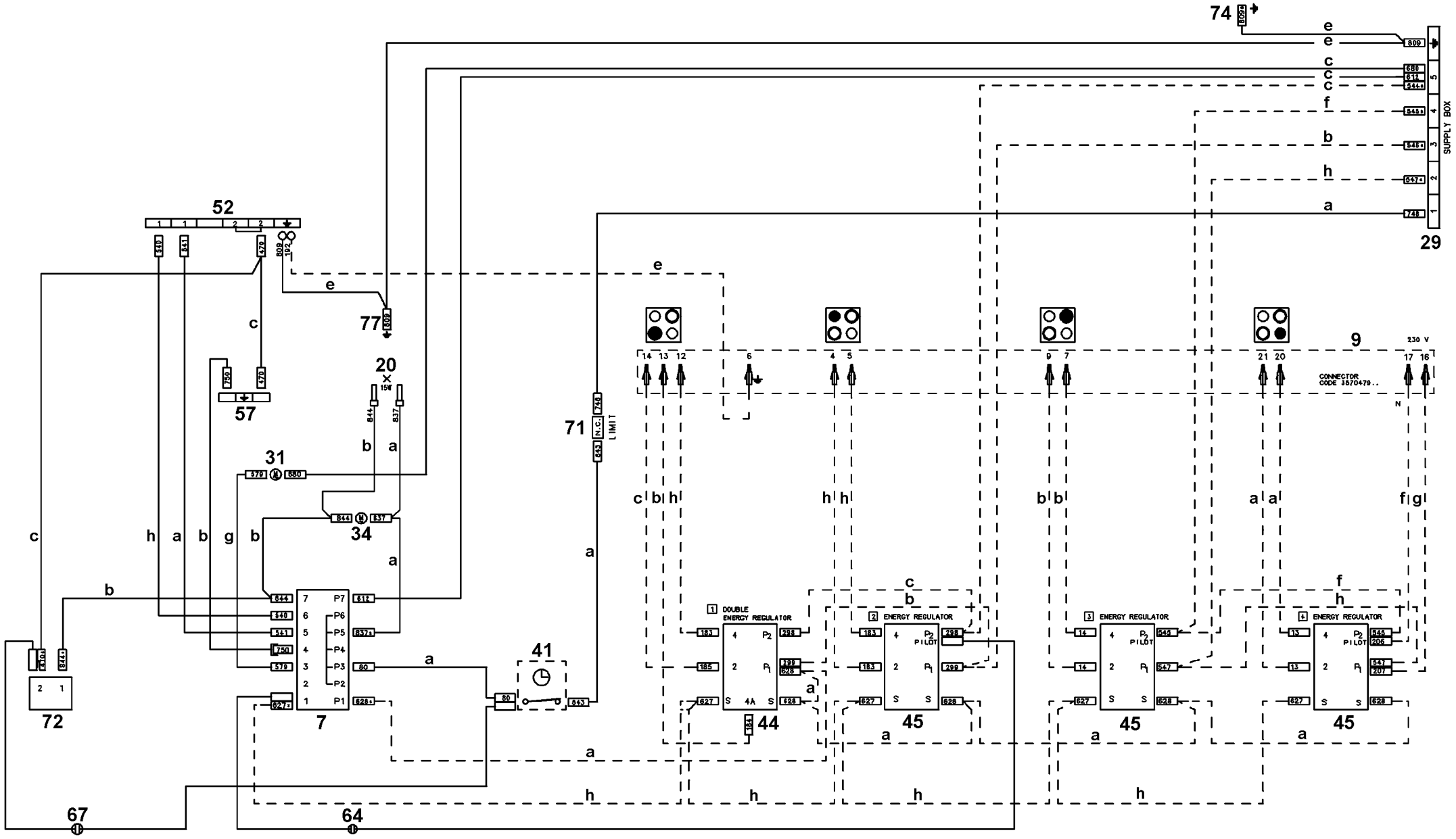
74
29
SUPPLY BOX
52
77
20
15W
57
31
34
71
LIMIT
N.C.
41
72
7
44
45
45
45
9
230 V
CONNECTOR CODE 3570479..
DOUBLE ENERGY REGULATOR
ENERGY REGULATOR
ENERGY REGULATOR
ENERGY REGULATOR
PILOT
67
64

357 427001b