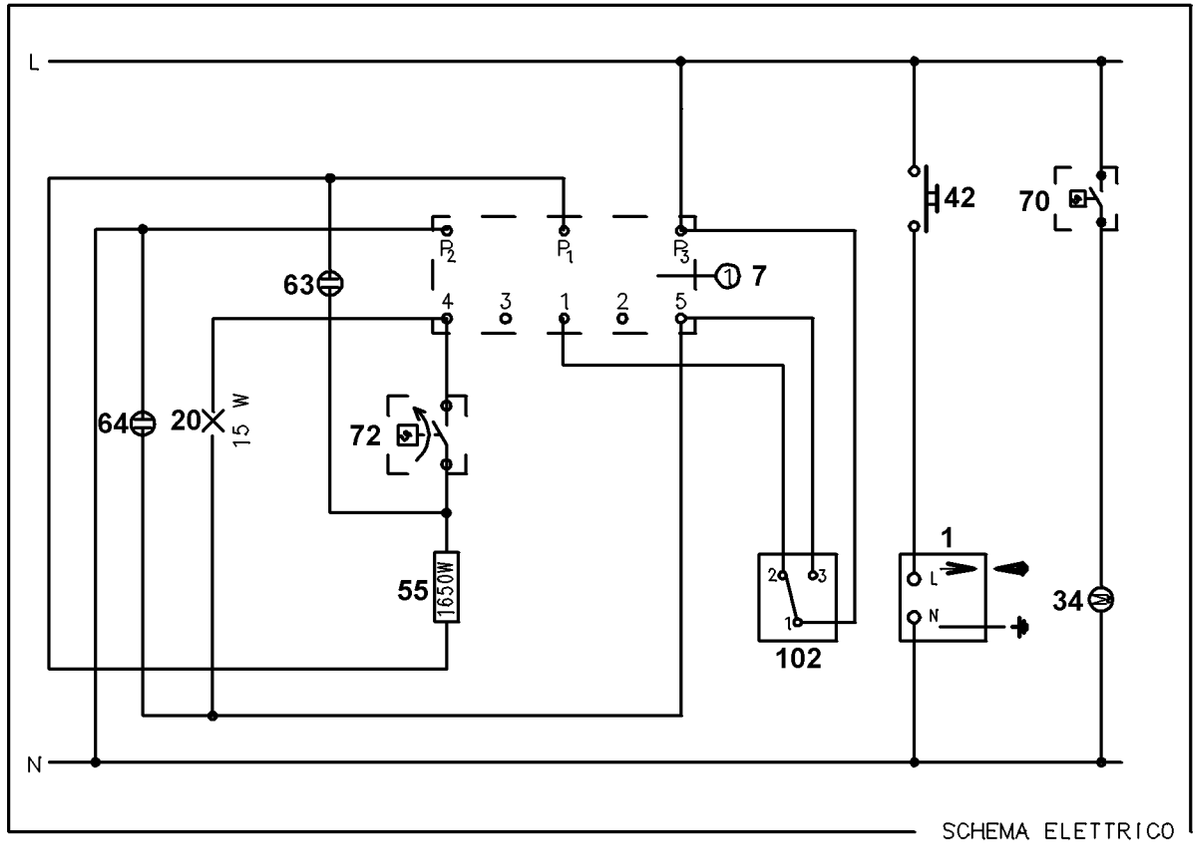


| POS. | 0 | 30 | 60+230 |
|---|---|---|---|
| 4 - P2 | | | |
| 3 - P1 | | | |
| 1 - P1 | | | |
| 2 - P1 | | | |
| 5 - P3 | | | |

357 415903a