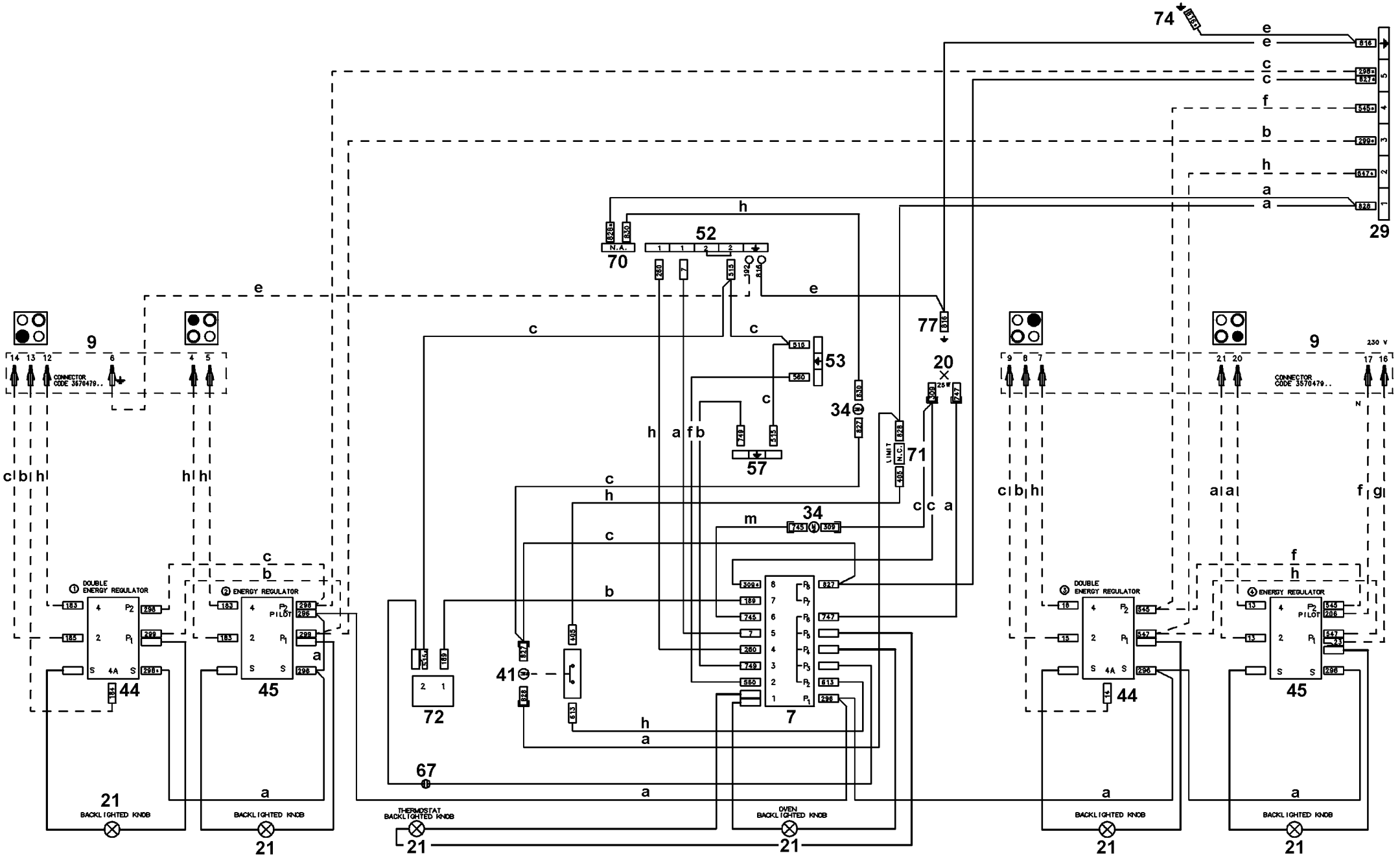
74
29
52
70
53
57
20
34
71
77
9
CONNECTOR CODE 3570479..
230 V
① DOUBLE ENERGY REGULATOR
② ENERGY REGULATOR
③ DOUBLE ENERGY REGULATOR
④ ENERGY REGULATOR
PILOT
44
45
72
41
7
67
21
BACKLIGHTED KNOB
THERMOSTAT BACKLIGHTED KNOB
OVEN BACKLIGHTED KNOB
LIMIT
N.C.
N.A.
357 428901b