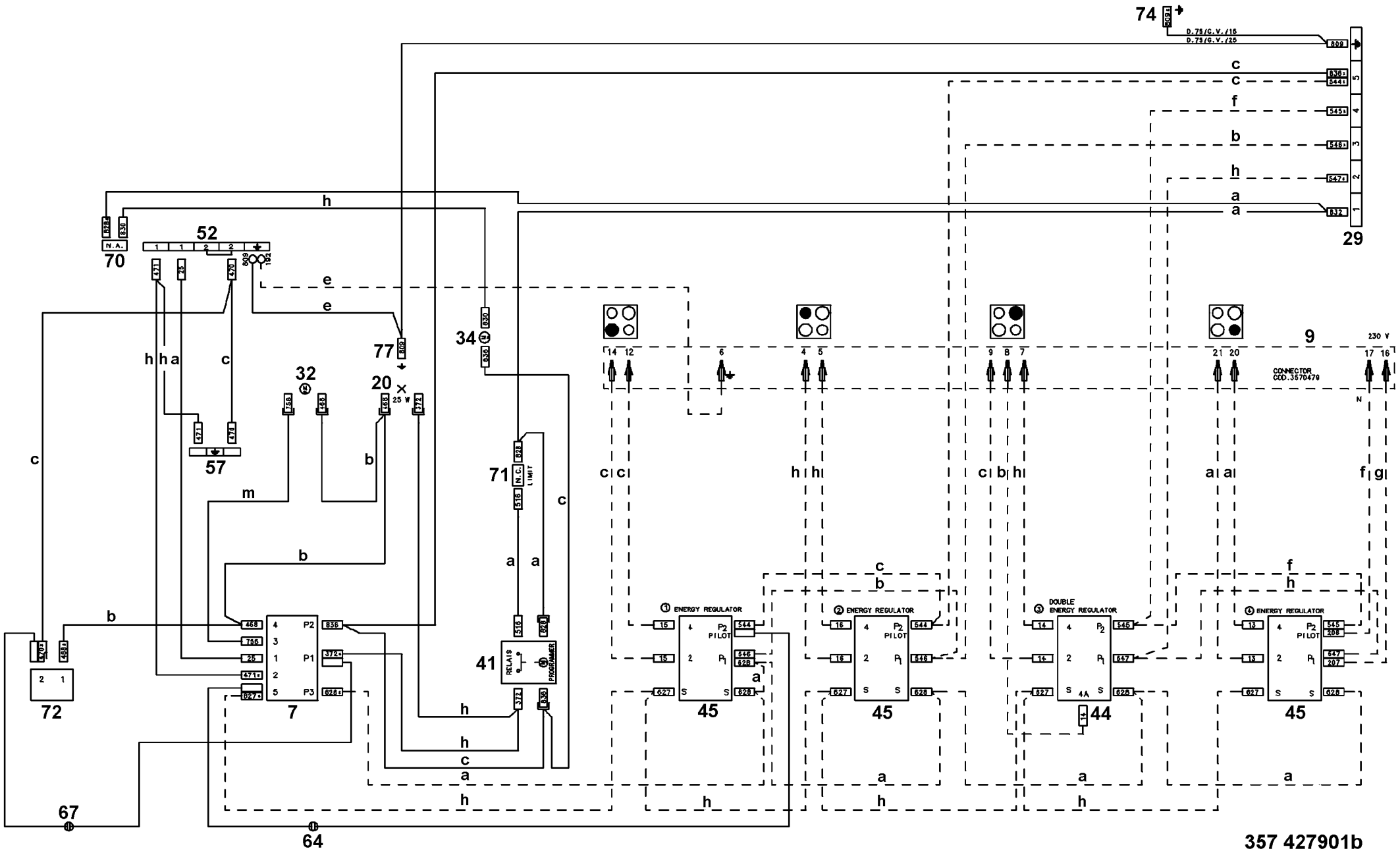
74
29
70
52
57
77
34
32
20
25 W
71
N.C.
LIMIT
41
RELAIS
PROGRAMMER
7
72
67
64
9
230 V
CONNECTOR
COD.3570479
1 ENERGY REGULATOR
2 ENERGY REGULATOR
3 DOUBLE
ENERGY REGULATOR
4 ENERGY REGULATOR
PILOT
45
44
4A
357 427901b