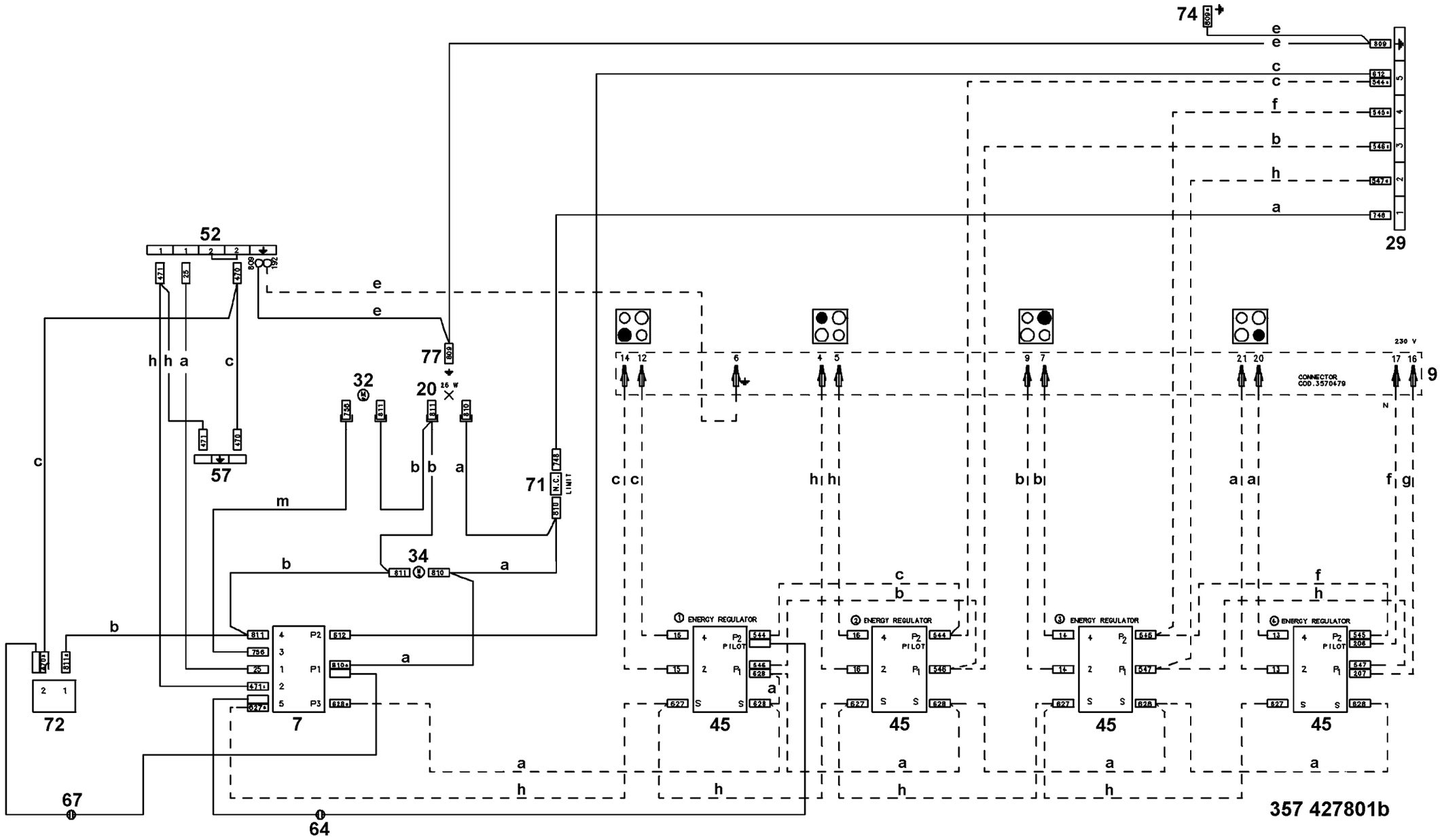
74
29
52
57
77
32
20
26 W
71
N.C.
LIMIT
34
72
7
45
ENERGY REGULATOR
PILOT
CONNECTOR
COD.3570479
230 V
N
9
67
64
357 427801b