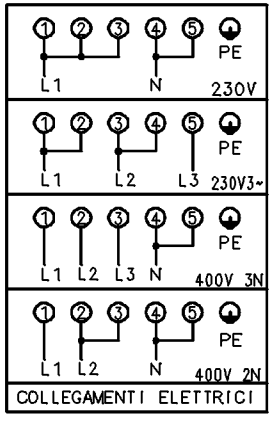
PE
L1
N
230V
L2
L3
230V3~
400V 3N
400V 2N
COLLEGAMENTI ELETTRICI

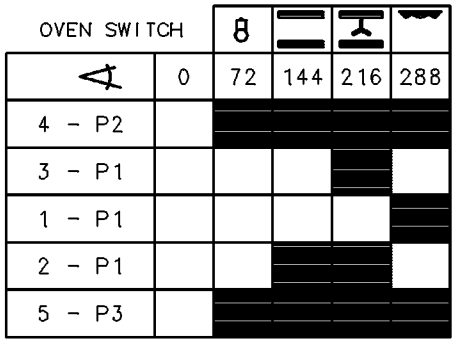
OVEN SWITCH
0
72
144
216
288
4 - P2
3 - P1
1 - P1
2 - P1
5 - P3

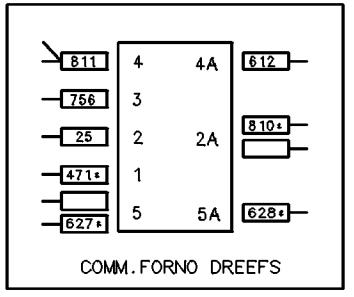
811
756
25
471*
627*
4
3
2
1
5
4A
2A
5A
612
810*
628*
COMM.FORNO DREEFS

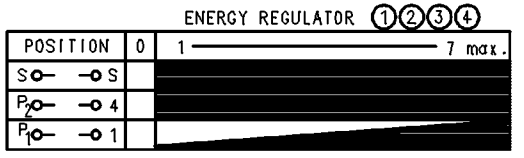
ENERGY REGULATOR
POSITION
0
1
7 max.
S
S
P2
4
P1
1

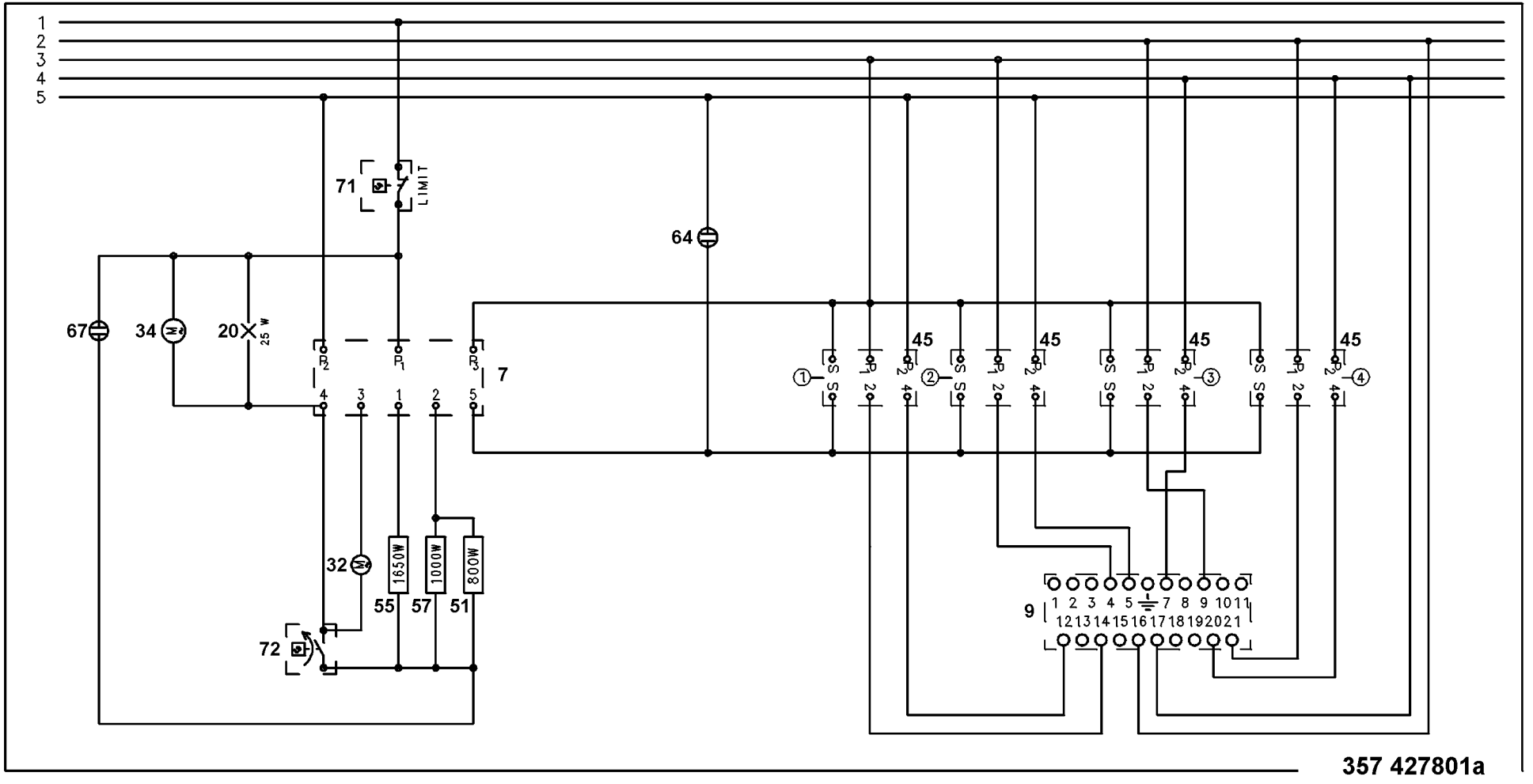
1
2
3
4
5
71
LIMIT
64
67
34
20
25 W
7
45
32
1650W
1000W
800W
55
57
51
72
9

357 427801a