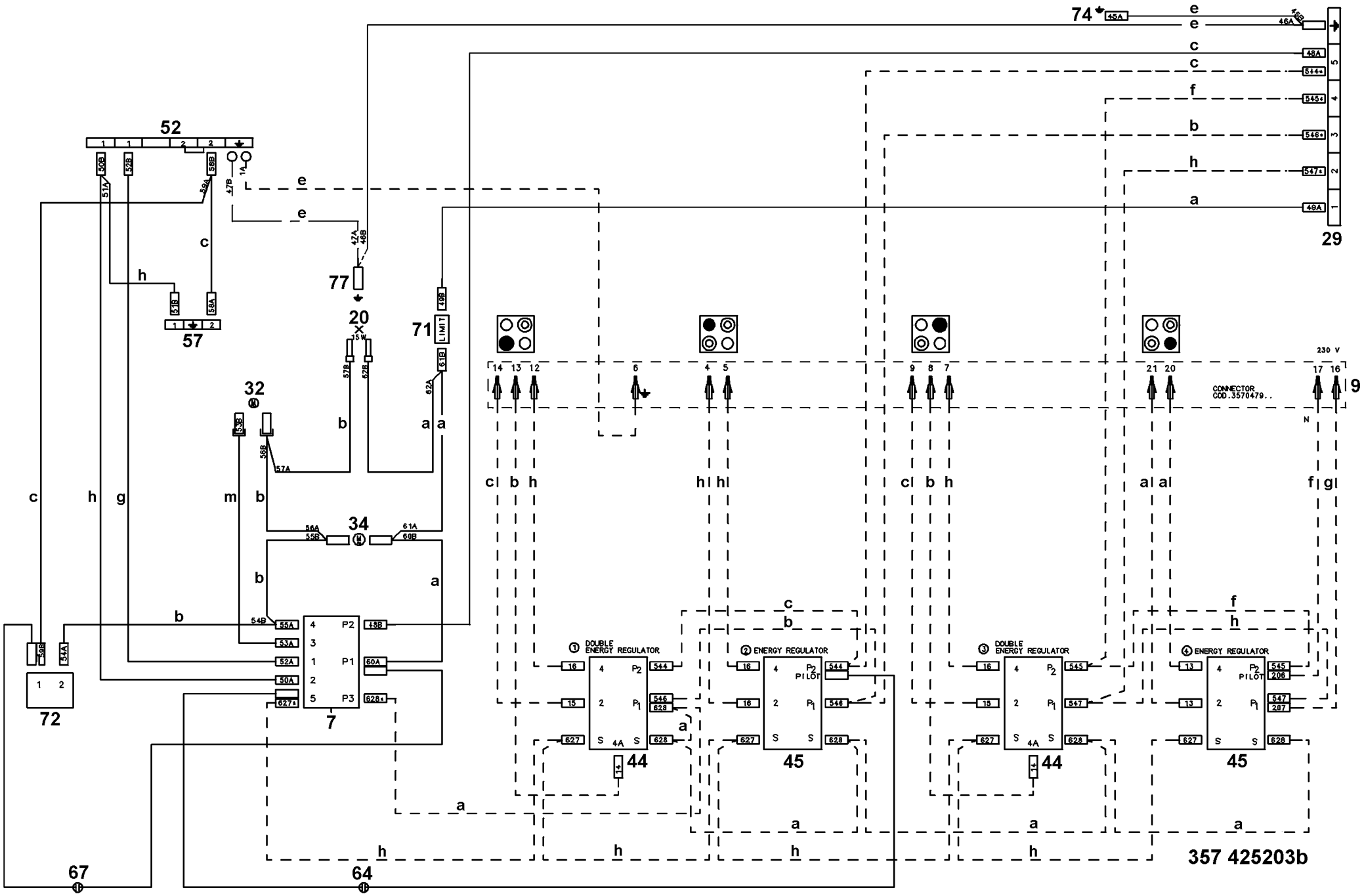
52
57
77
20
71
LIMIT
32
34
72
7
74
29
9
67
64
CONNECTOR
COD.3570479..
230 V
① DOUBLE ENERGY REGULATOR
② ENERGY REGULATOR
③ DOUBLE ENERGY REGULATOR
④ ENERGY REGULATOR
PILOT
44
45
357 425203b