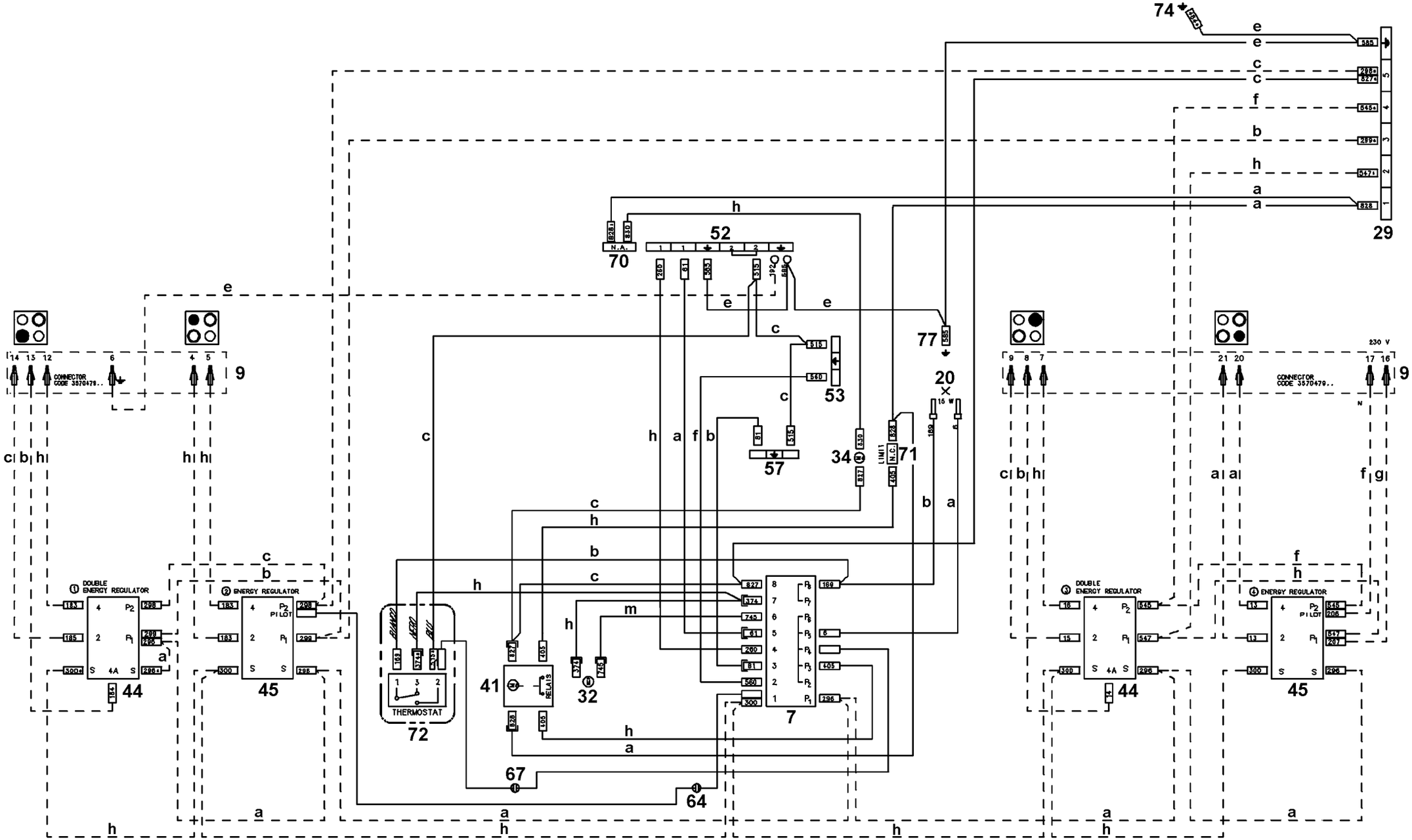
74
29
52
70
53
57
77
20
34
71
9
44
45
41
32
7
72
THERMOSTAT
67
64
DOUBLE ENERGY REGULATOR
ENERGY REGULATOR
CONNECTOR CODE 3570479..
230 V

357 421701b