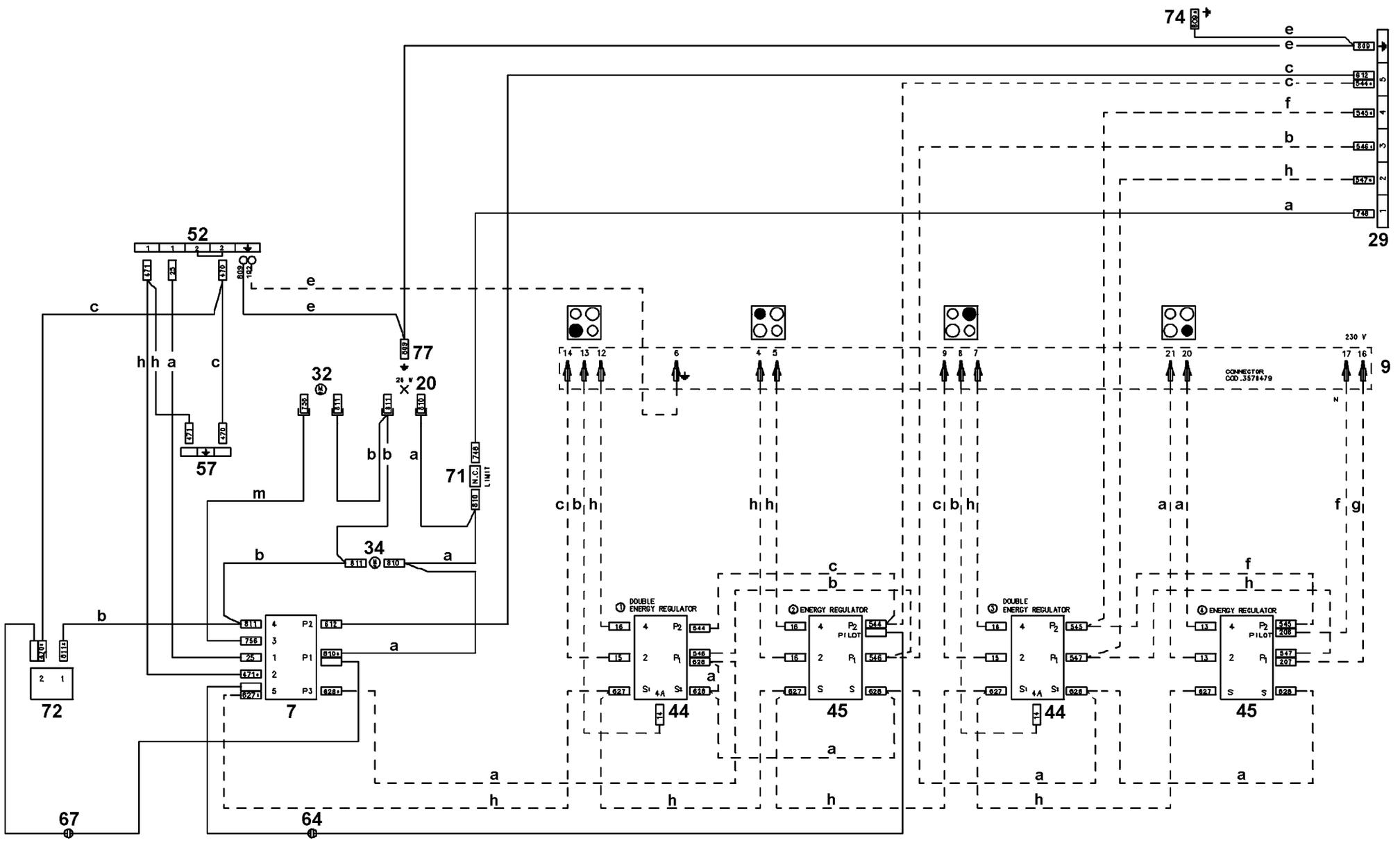
74
29
52
57
77
20
32
71
LIMIT
N.C.
34
7
72
67
64
9
230 V
CONNECTOR
COD.3578479
DOUBLE ENERGY REGULATOR
ENERGY REGULATOR
PILOT
44
45

357 417701b