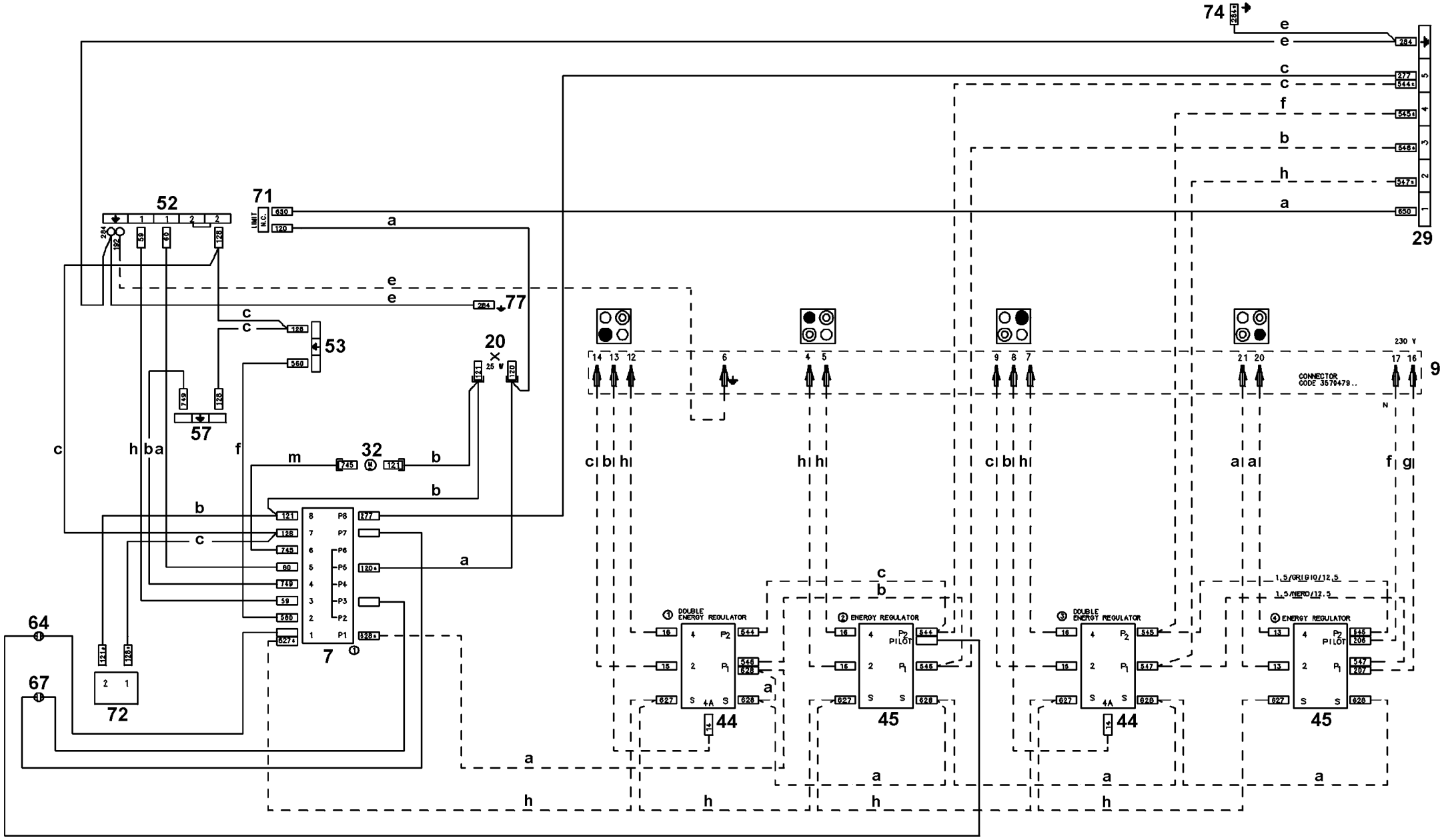
74
29
52
71
LIMIT
N.C.
53
57
20
25 W
32
77
7
72
64
67
9
CONNECTOR
CODE 3570479..
230 V
N
DOUBLE
ENERGY REGULATOR
ENERGY REGULATOR
PILOT
44
45
1.5/GRIGIO/12.5
1.5/NERO/12.5

357 765002b