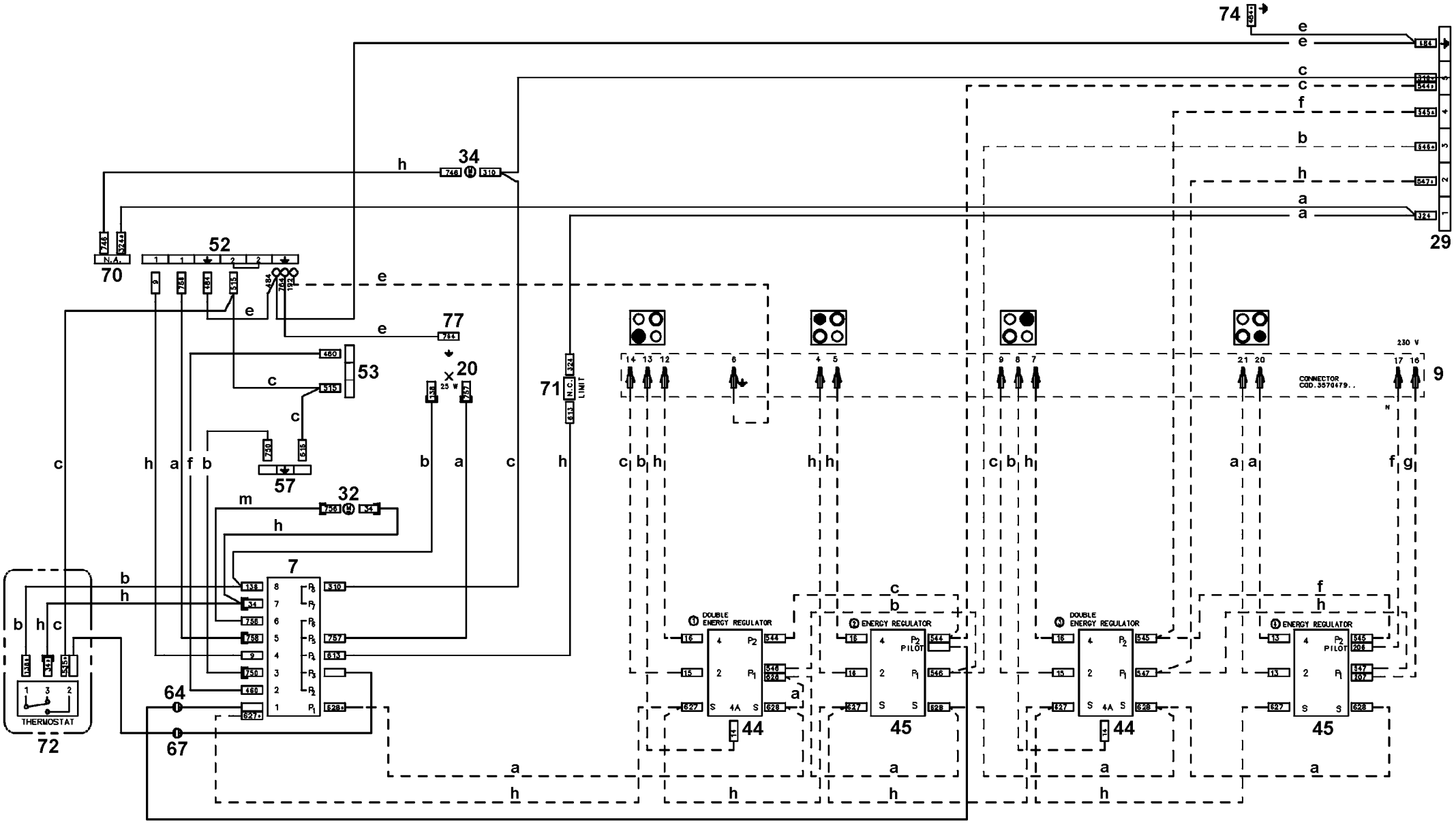
74
29
34
52
70
77
53
20
25 W
71
LIMIT
57
32
7
THERMOSTAT
72
64
67
DOUBLE ENERGY REGULATOR
44
ENERGY REGULATOR
PILOT
45
DOUBLE ENERGY REGULATOR
44
ENERGY REGULATOR
PILOT
45
230 V
CONNECTOR COD.3570479..
9

357 764003b