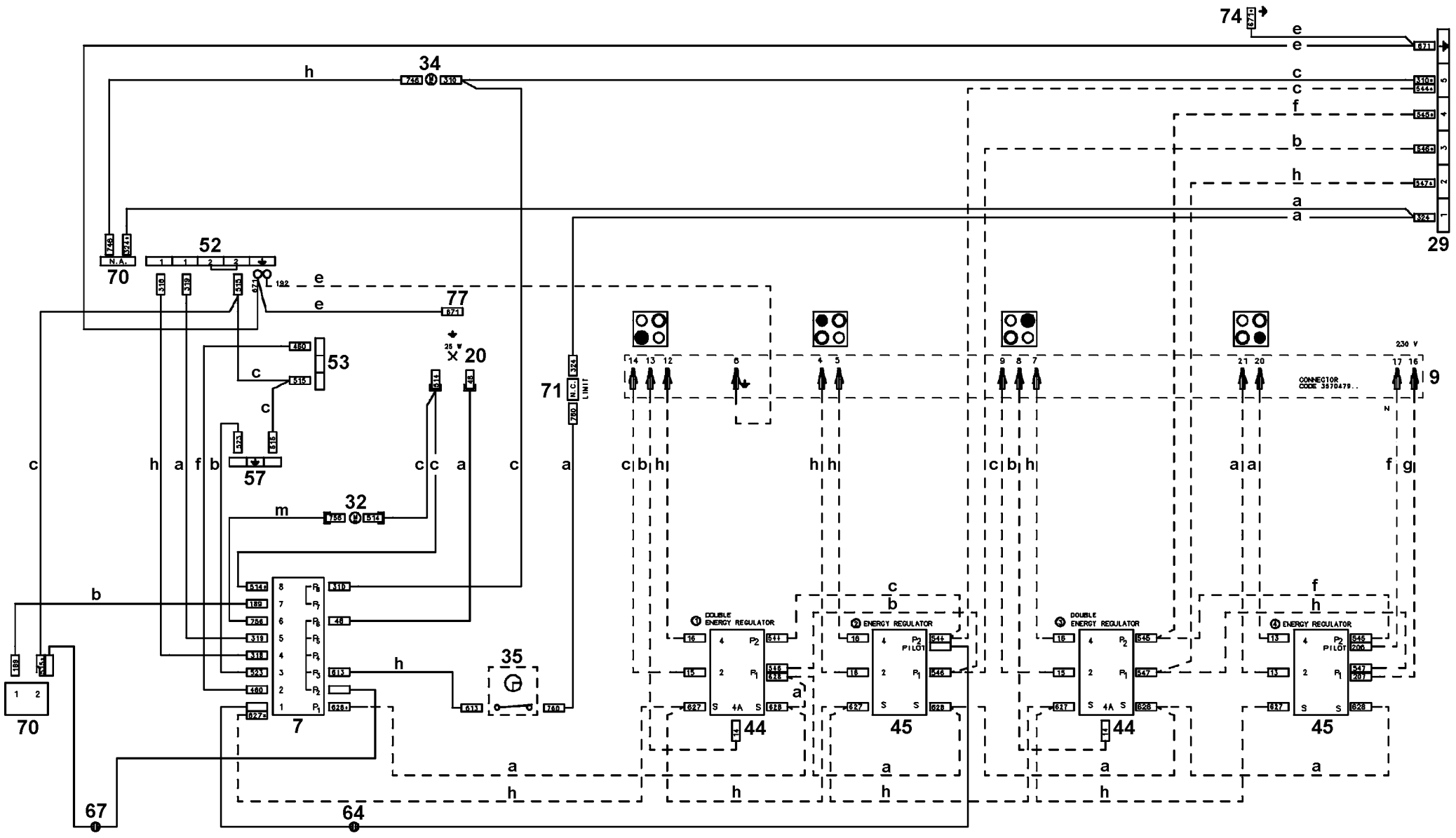
74
34
52
70
77
53
20
71
LIMIT
57
32
35
7
44
45
29
9
DOUBLE ENERGY REGULATOR
ENERGY REGULATOR
PILOT
CONNECTOR CODE 3870479..
230 V
67
64

357 772402b